8. 3 级维修

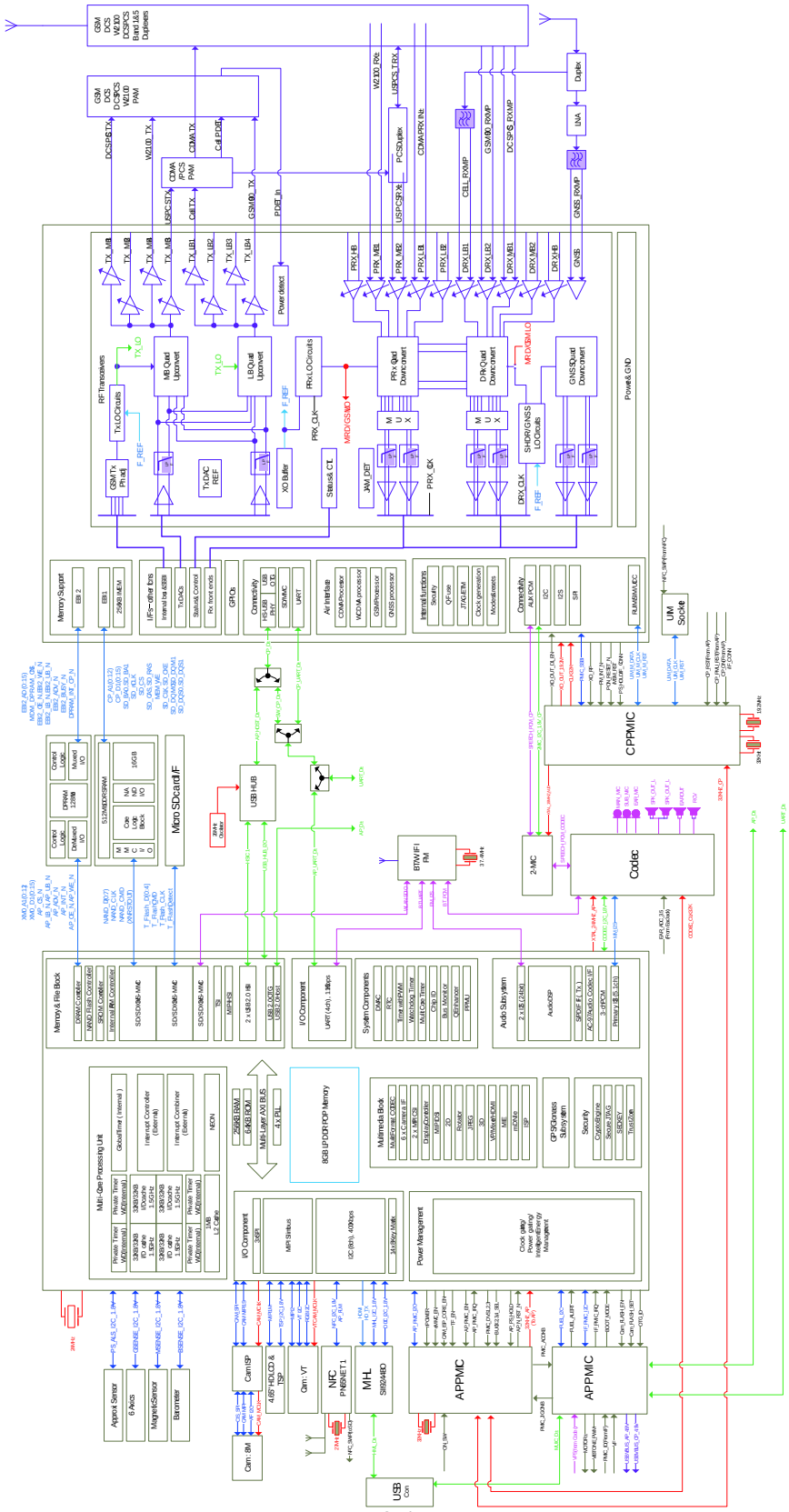

保密和所有权-本维修手册内容的变更恕不另行通知。
未经三星书面授权而发布，传送，或违背本文件中的任何内容或数据是严格禁止的。

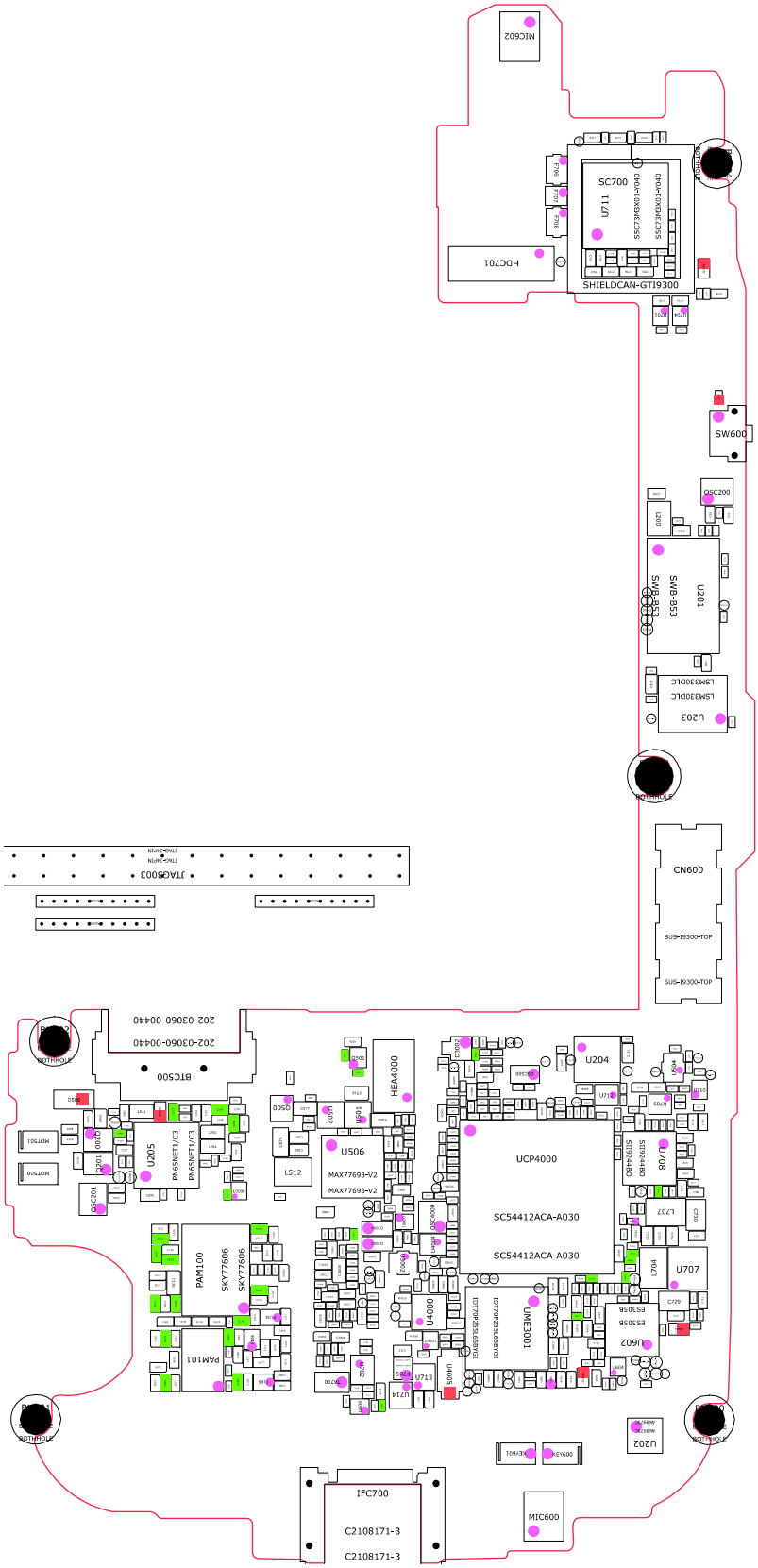

保密和所有权-本维修手册内容的变更恕不另行通知。
未经三星书面授权而发布，传送，或违背本文件中的任何内容或数据是严格禁止的。

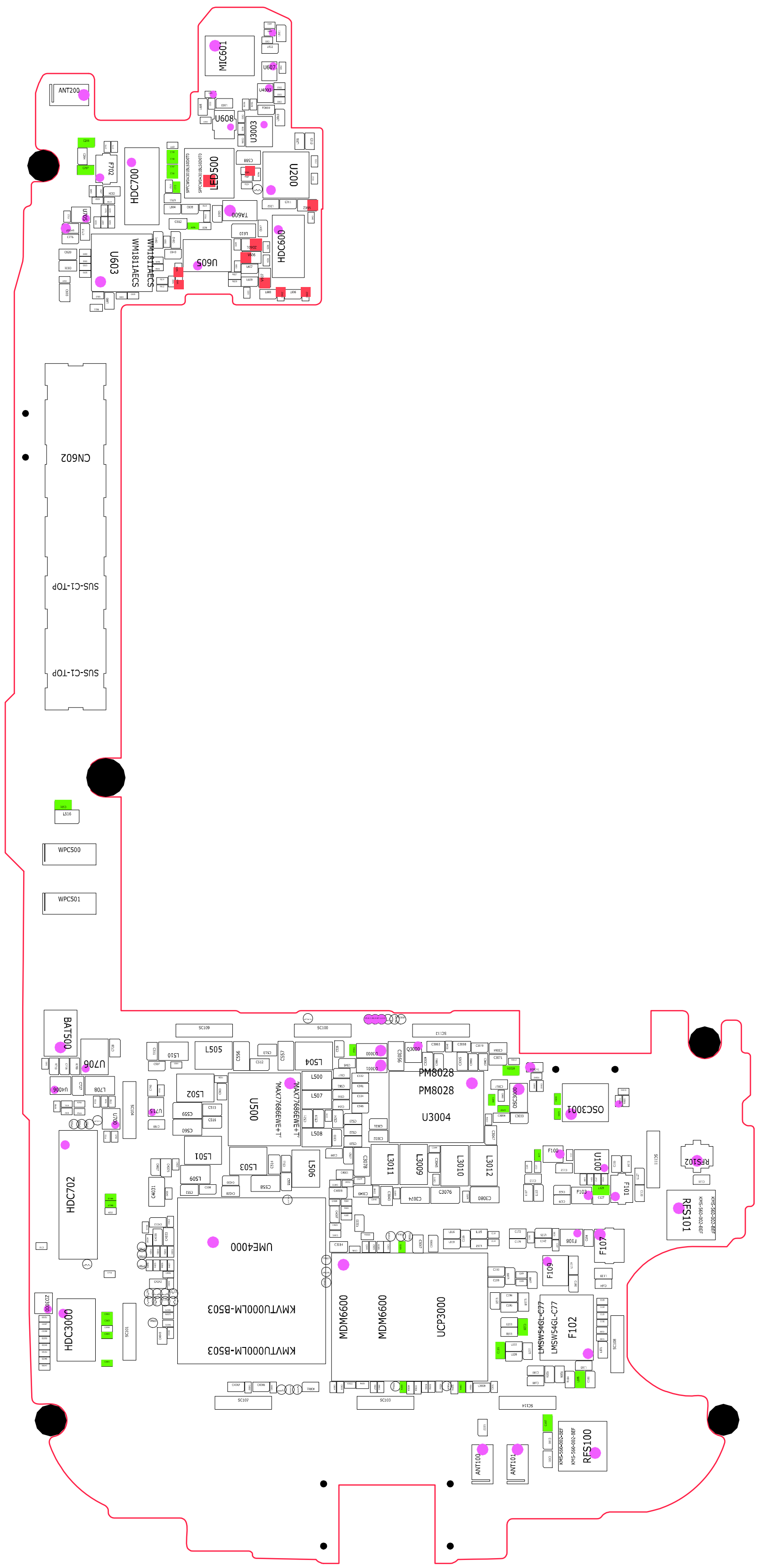

保密和所有权-本维修手册内容的变更恕不另行通知。
未经三星书面授权而发布，传送，或违背本文件中的任何内容或数据是严格禁止的。

8-3.故障排除流程图

设备

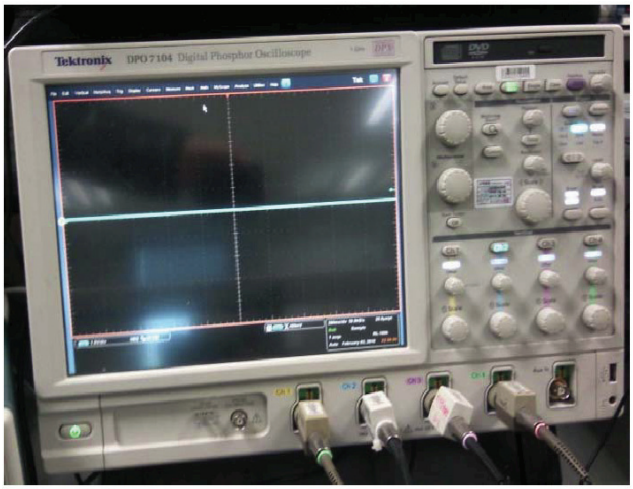

↑示波器

↑数字万用表

↑电源供电器

↑+字螺丝刀，ESD 安全镊子

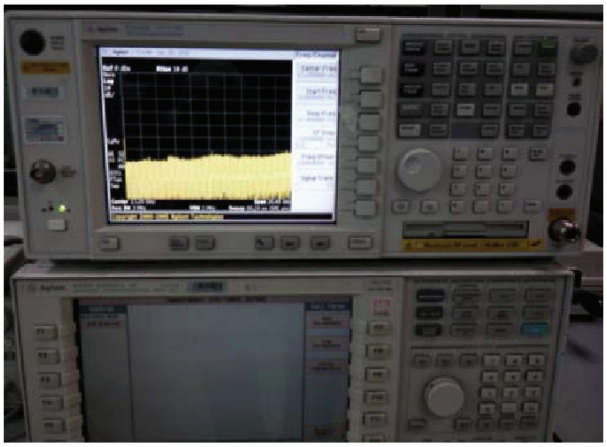

↑8960和光谱分析器

↑焊接熨斗

保密和所有权-本维修手册内容的变更恕不另行通知。
未经三星书面授权而发布，传送，或违背本文件中的任何内容或数据是严格禁止的。

8-3-1 开机

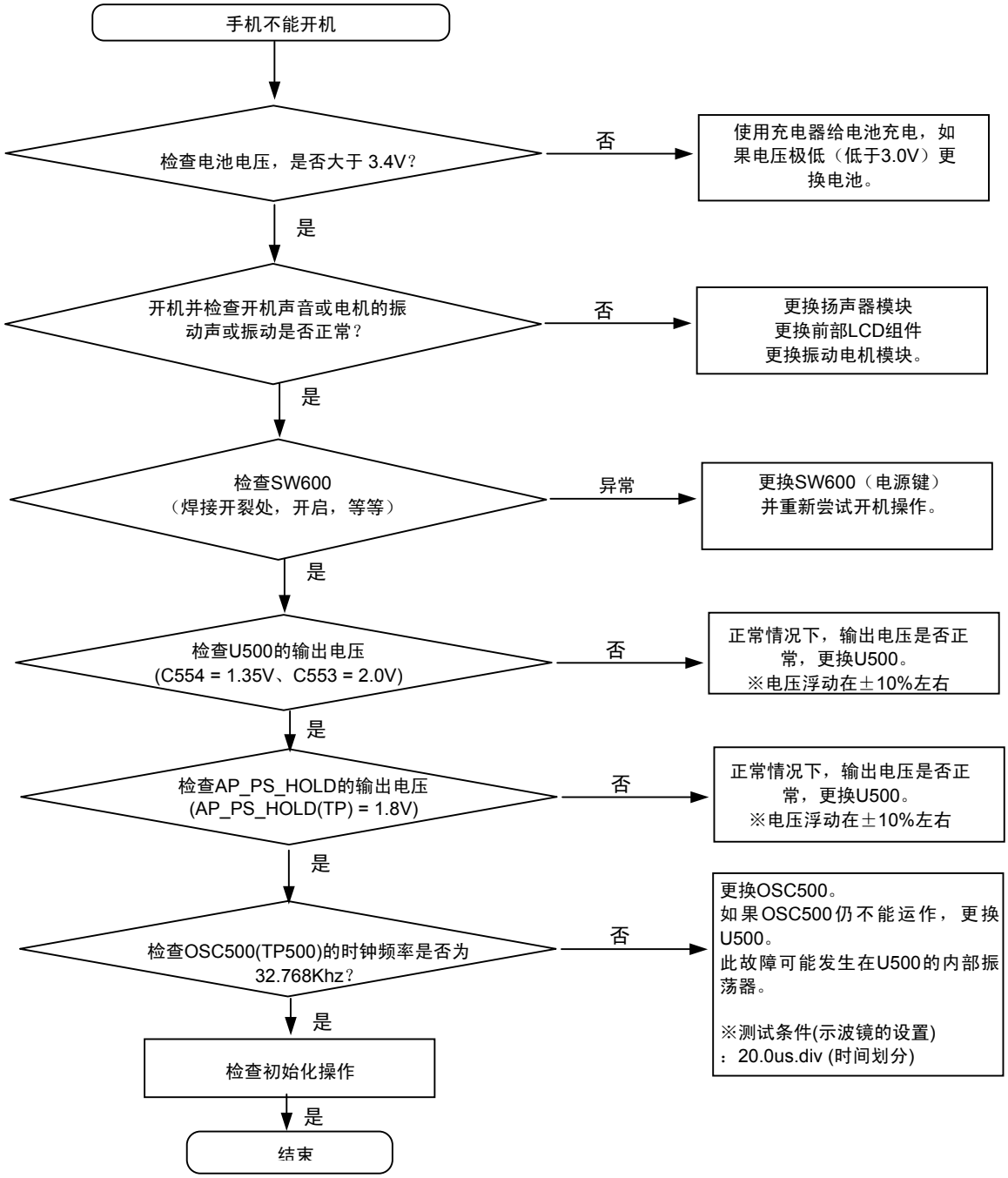

保密和所有权-本维修手册内容的变更恕不另行通知。
未经三星书面授权而发布，传送，或违背本文件中的任何内容或数据是严格禁止的。

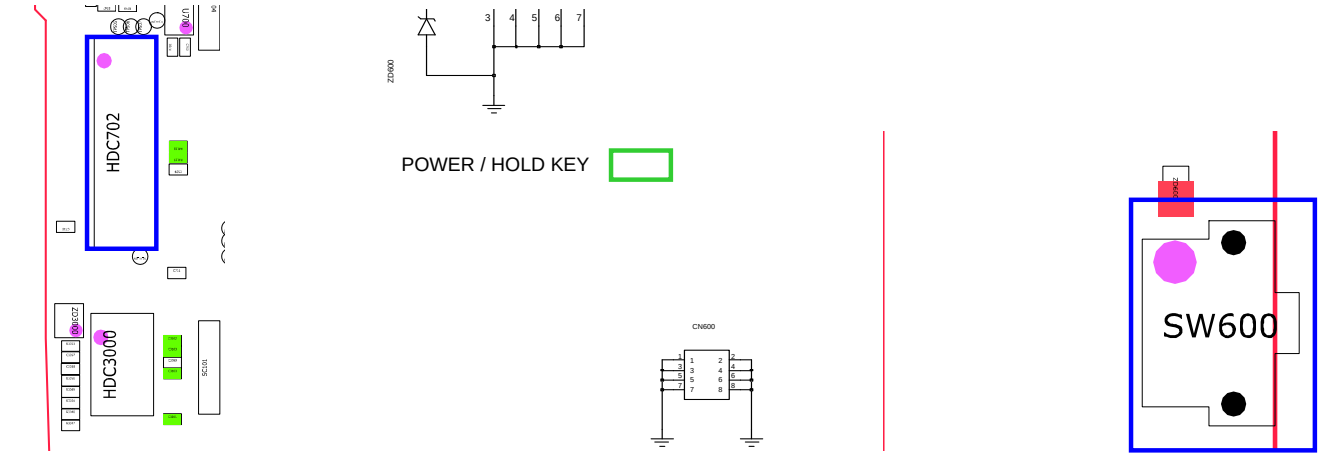

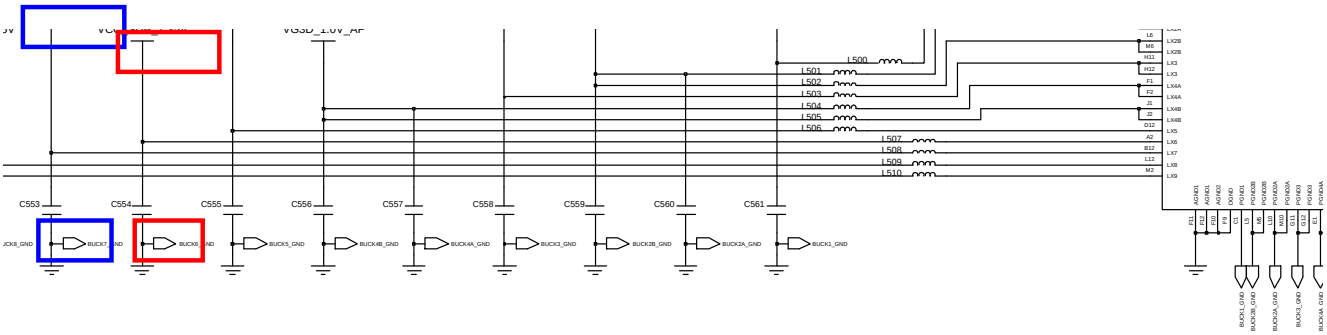

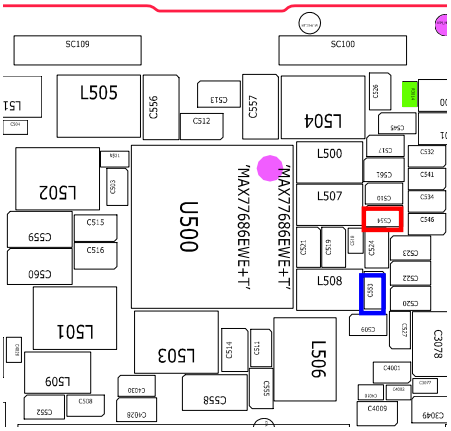

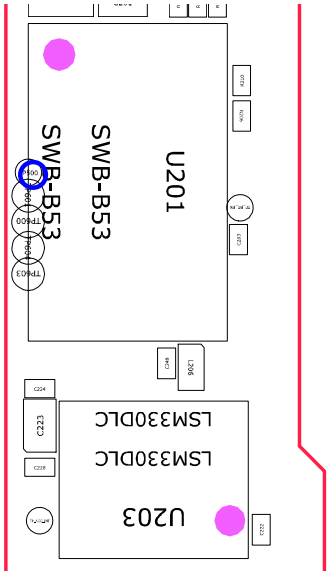

Confidential and proprietary-the contents in this service guide subject to change without prior notice.
Distribution, transmission, or infringement of any content or data from this document without Samsung's written authorization is strictly prohibited.

8-3-2. 初始化

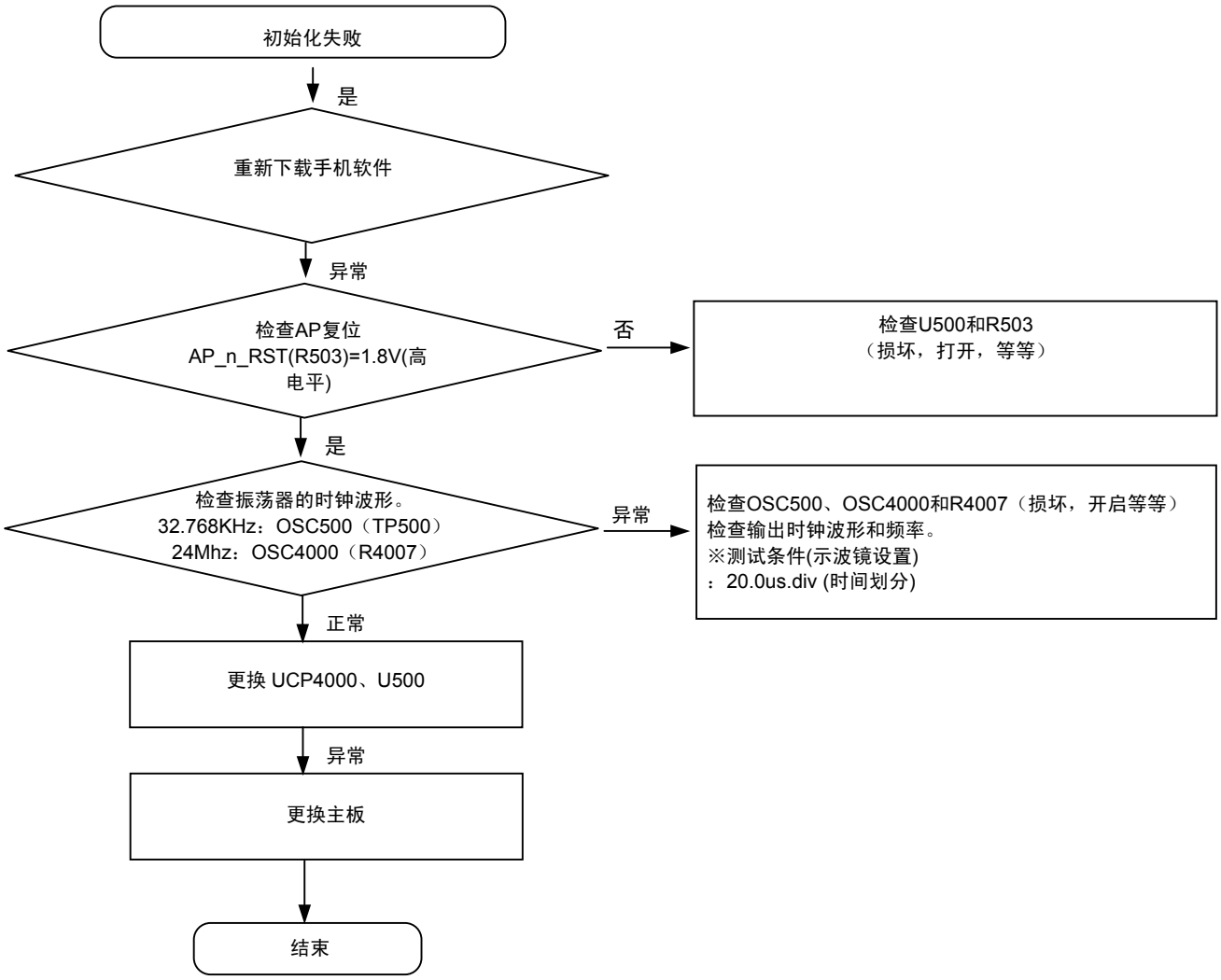

保密和所有权-本维修手册内容的变更恕不另行通知。
未经三星书面授权而发布，传送，或违背本文件中的任何内容或数据是严格禁止的。

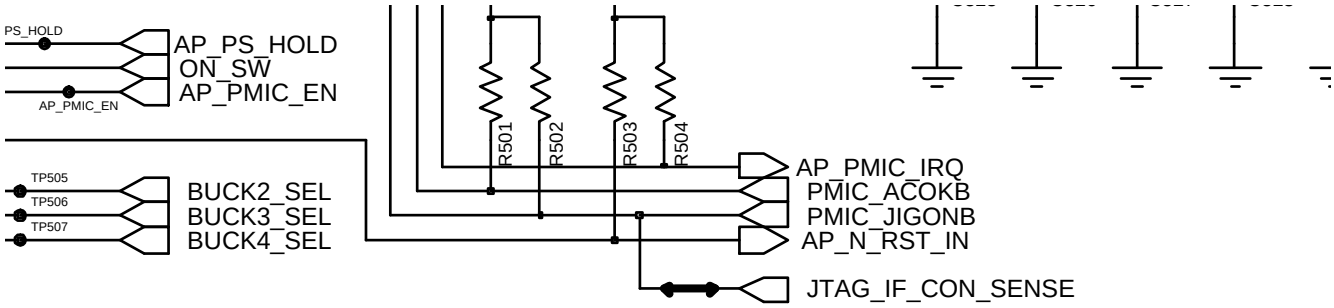

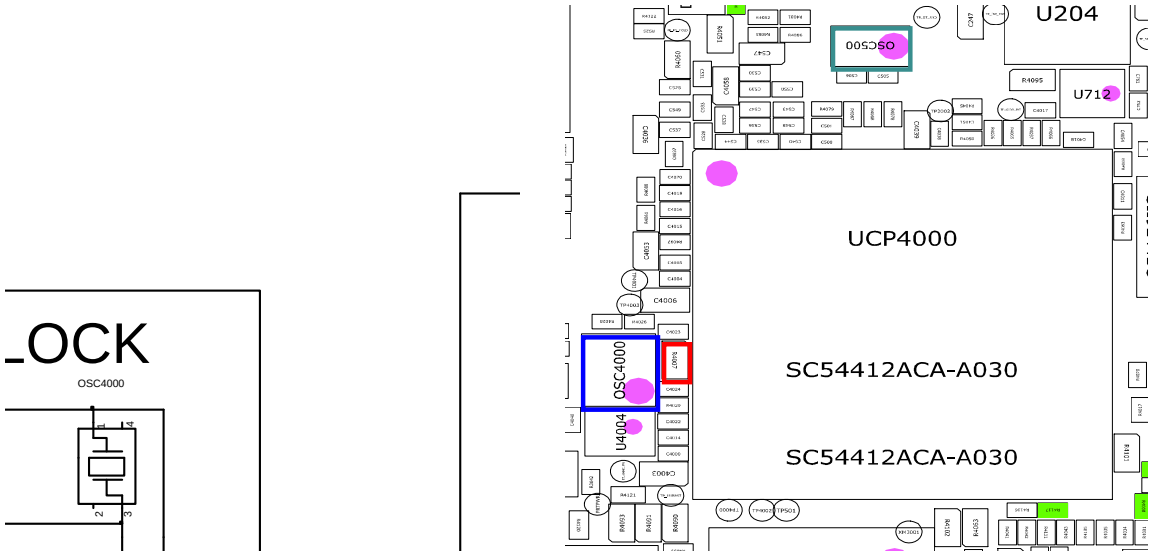

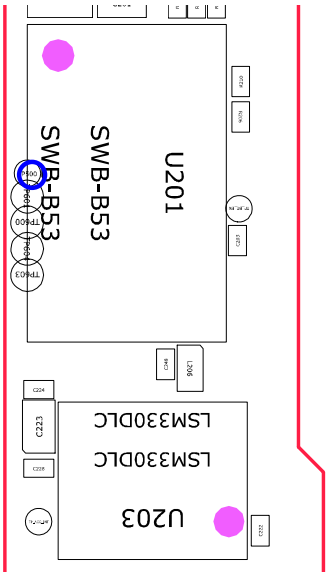

Confidential and proprietary-the contents in this service guide subject to change without prior notice.
Distribution, transmission, or infringement of any content or data from this document without Samsung's written authorization is strictly prohibited.

8-3-3．无服务

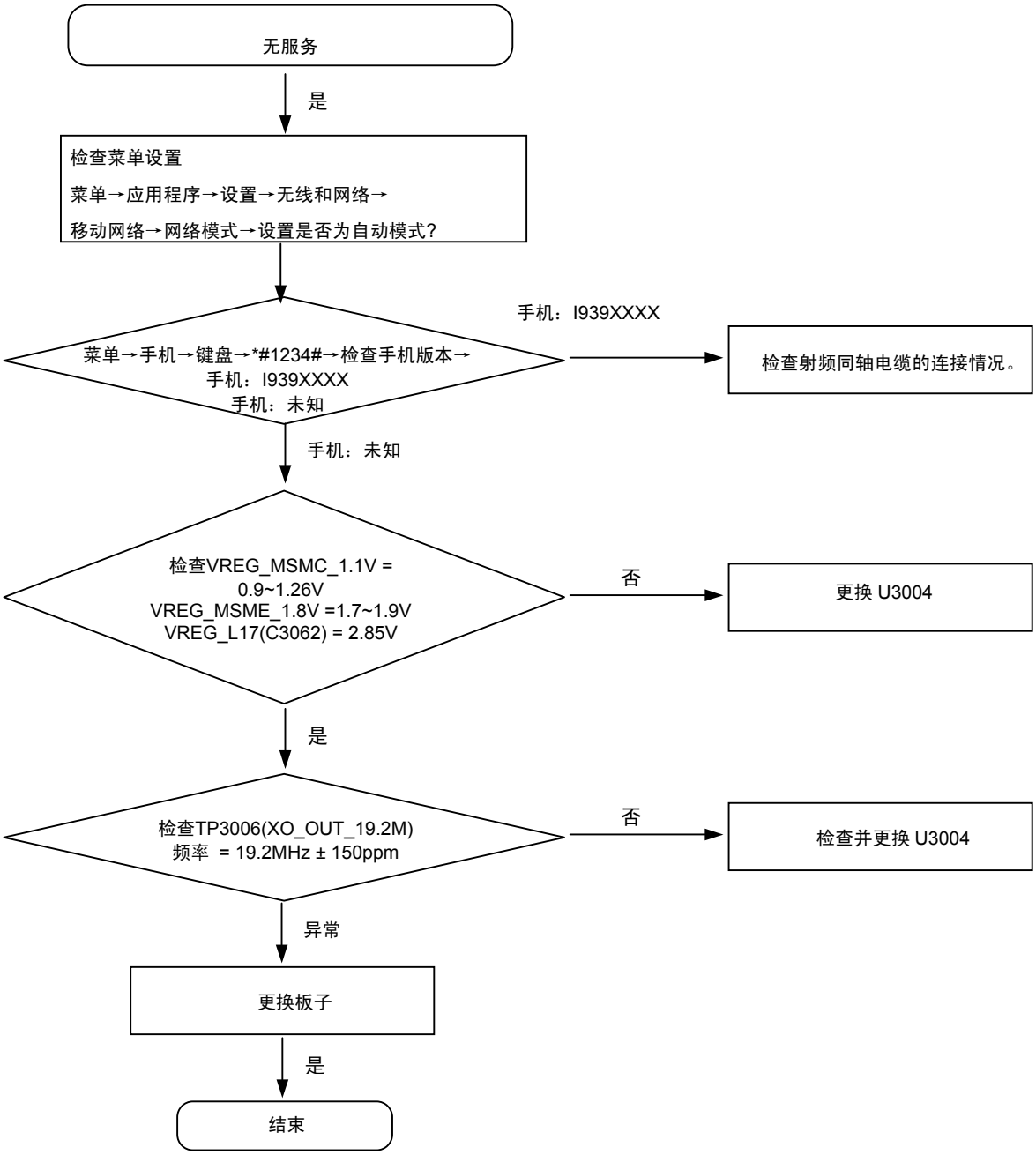

保密和所有权-本维修手册内容的变更恕不另行通知。
未经三星书面授权而发布，传送，或违背本文件中的任何内容或数据是严格禁止的。

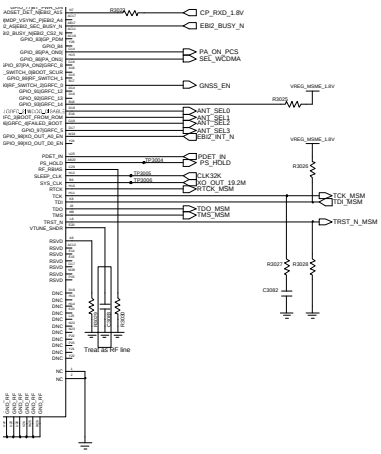

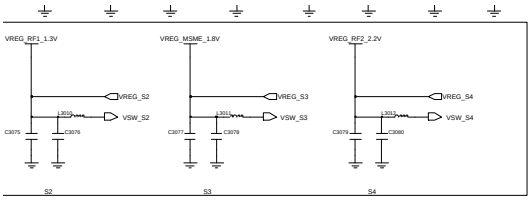

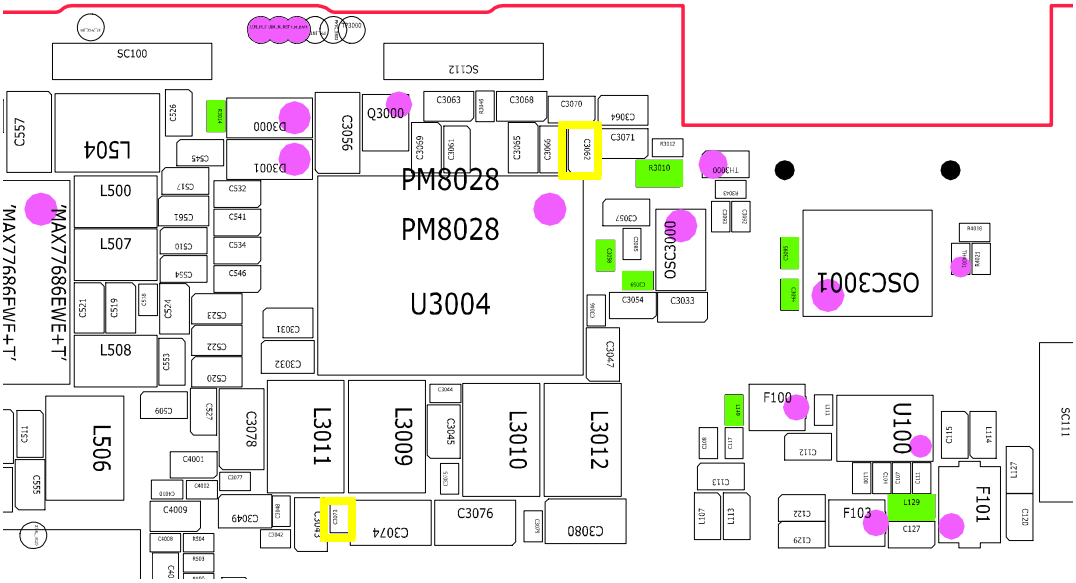

Confidential and proprietary-the contents in this service guide subject to change without prior notice.
Distribution, transmission, or infringement of any content or data from this document without Samsung's written authorization is strictly prohibited.

8-3-4.Sim 卡

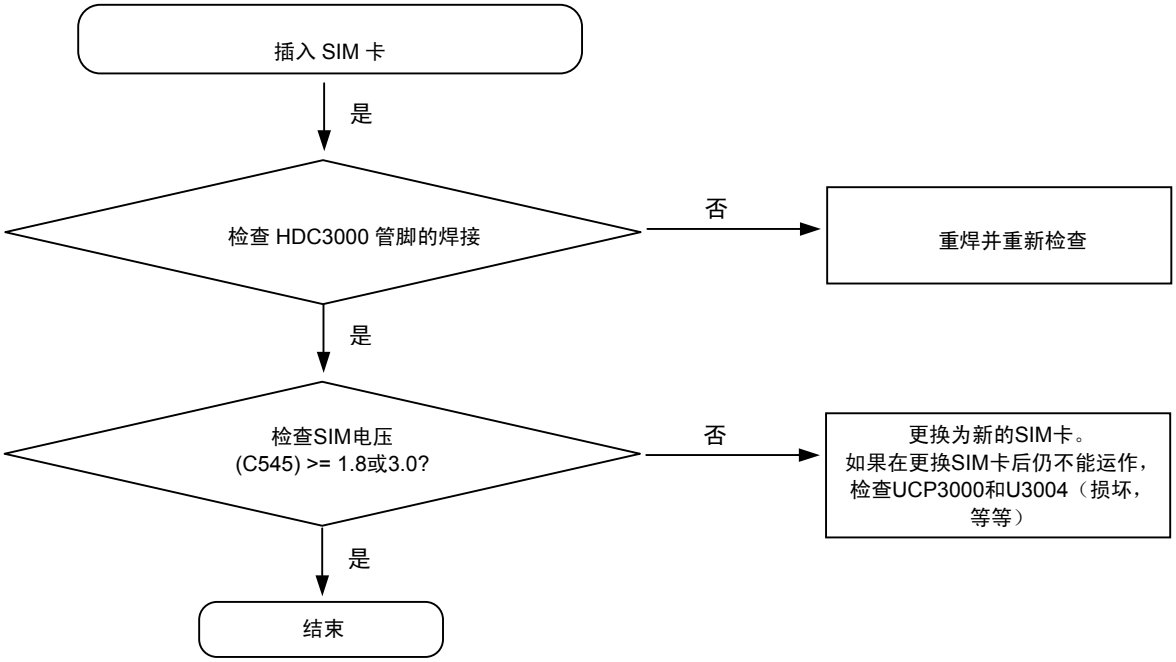

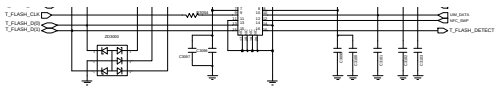

Micro SD / SIM

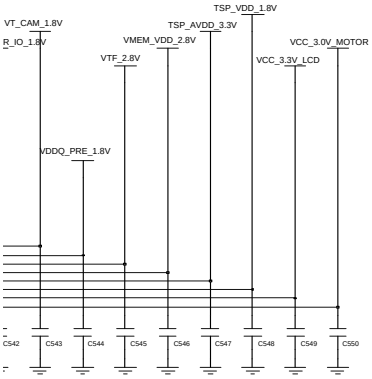

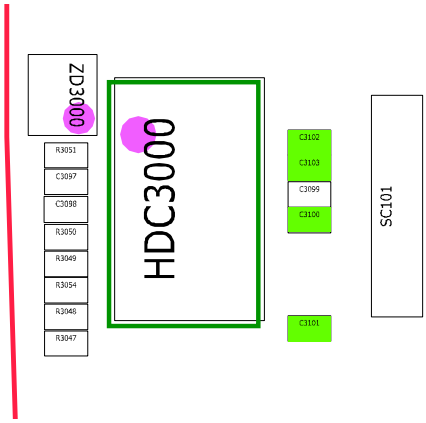

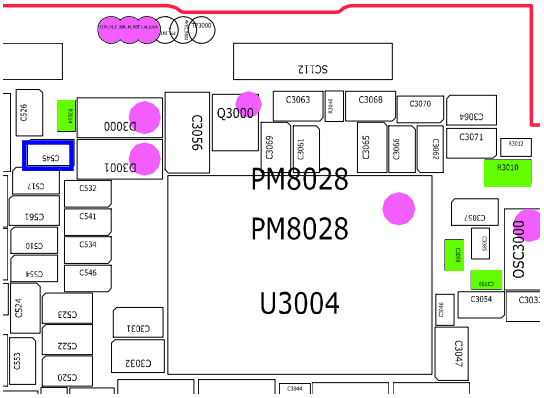

保密和所有权-本维修手册内容的变更恕不另行通知。
未经三星书面授权而发布，传送，或违背本文件中的任何内容或数据是严格禁止的。

8-3-5.充电部分

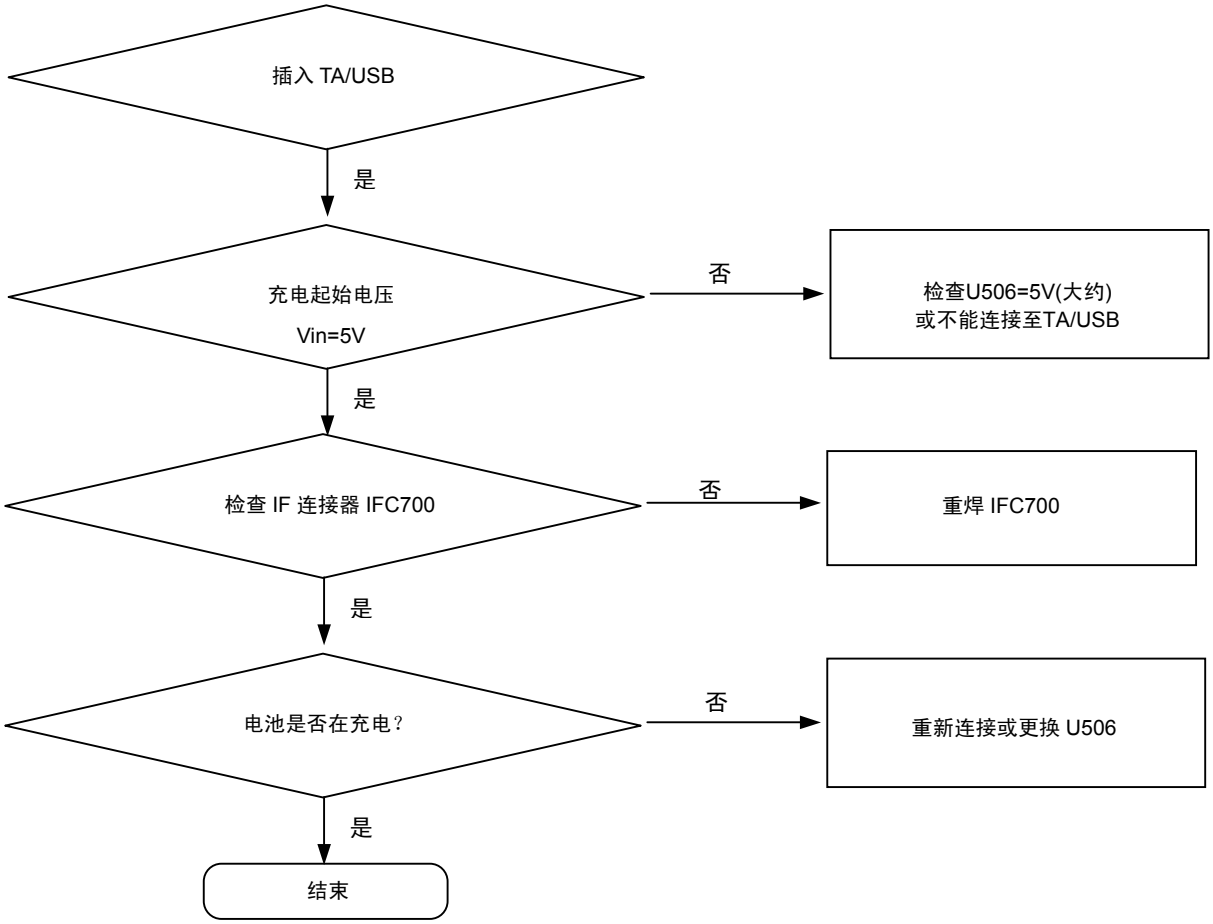

保密和所有权-本维修手册内容的变更恕不另行通知。
未经三星书面授权而发布，传送，或违背本文件中的任何内容或数据是严格禁止的。

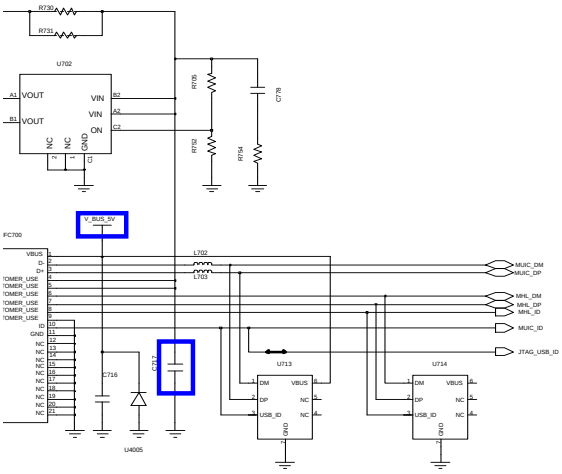

11PIN USB CONNECTOR

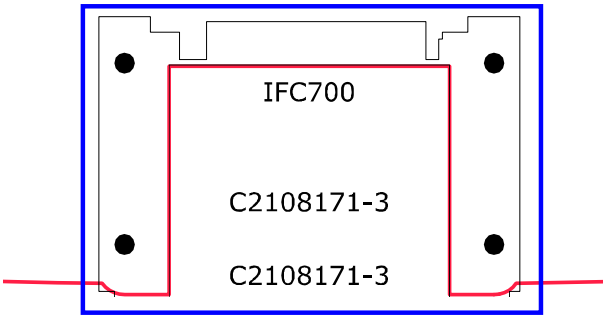

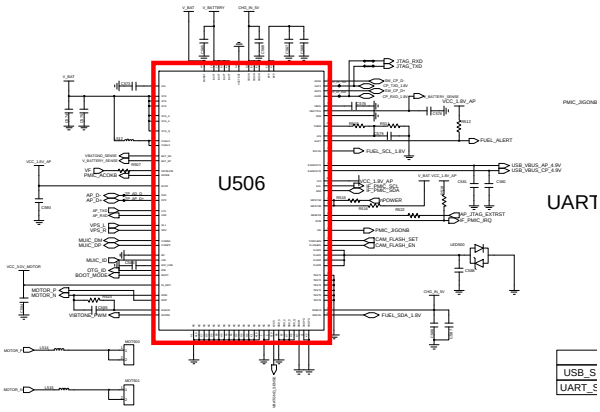

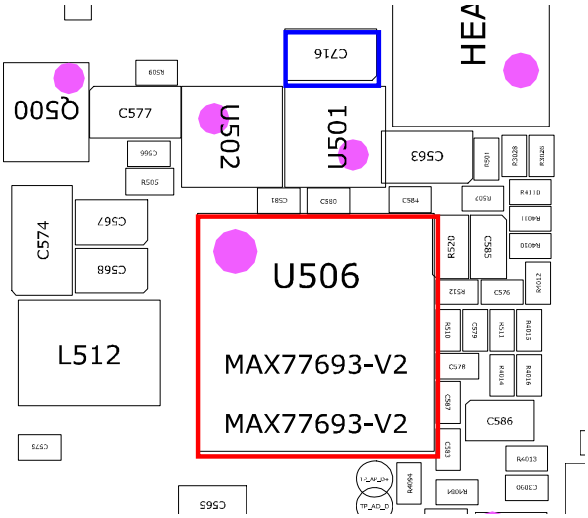

Confidential and proprietary-the contents in this service guide subject to change without prior notice.
Distribution, transmission, or infringement of any content or data from this document without Samsung's written authorization is strictly prohibited.

8-3-6.话筒部分（主话筒）

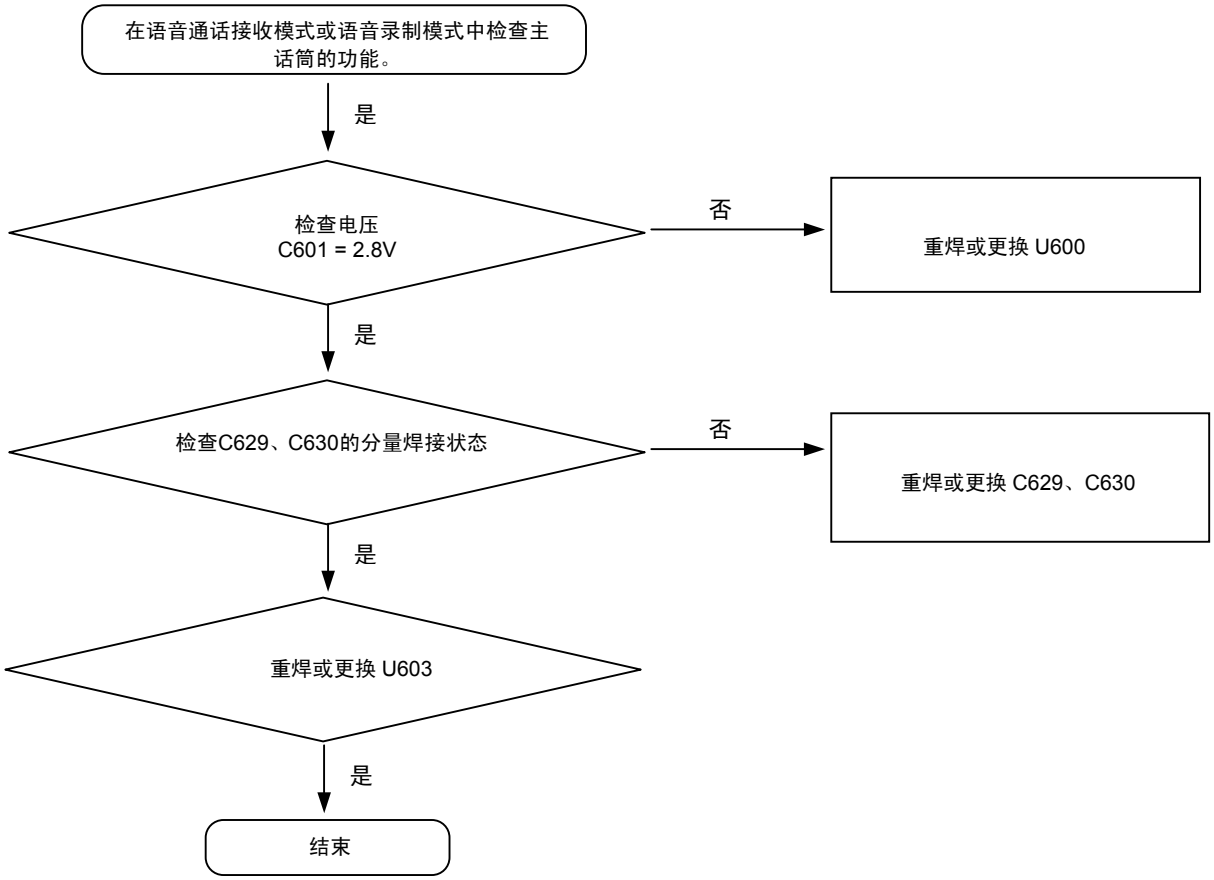

保密和所有权-本维修手册内容的变更恕不另行通知。
未经三星书面授权而发布，传送，或违背本文件中的任何内容或数据是严格禁止的。

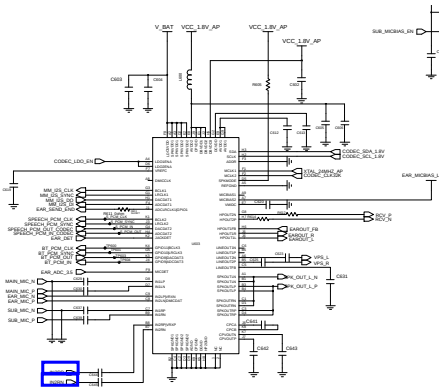

Audio Codec

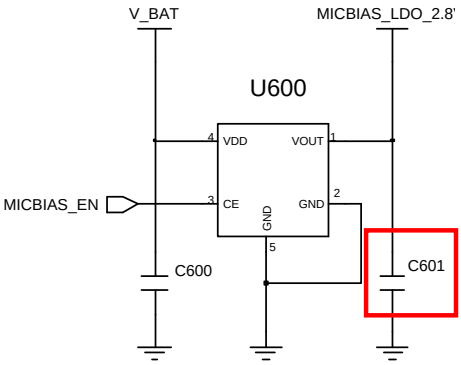

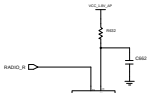

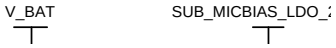

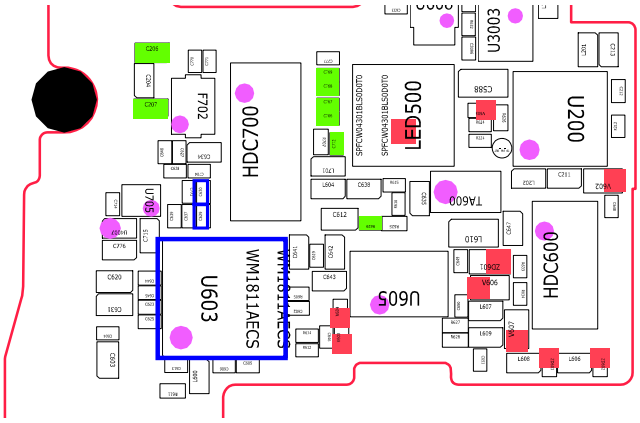

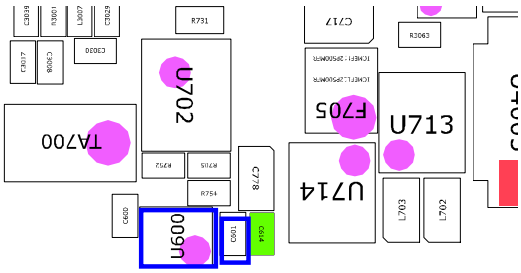

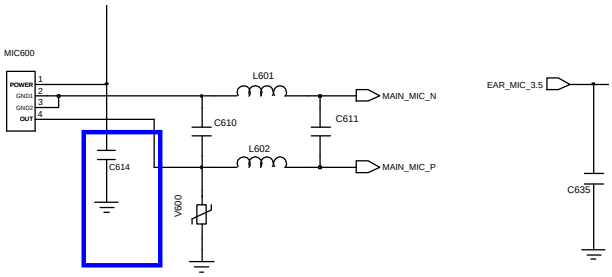

Main MIC

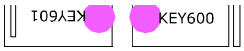

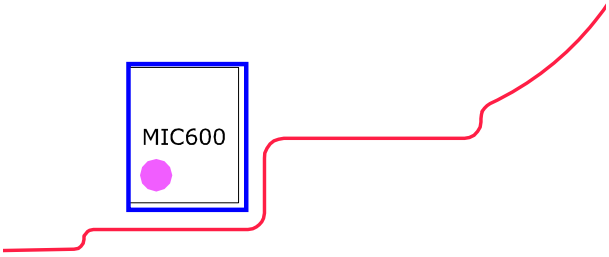

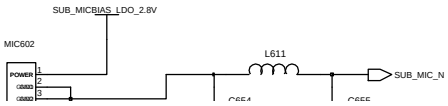

Confidential and proprietary-the contents in this service guide subject to change without prior notice.
Distribution, transmission, or infringement of any content or data from this document without Samsung's written authorization is strictly prohibited.

8-3-6-1.话筒部分（副话筒）

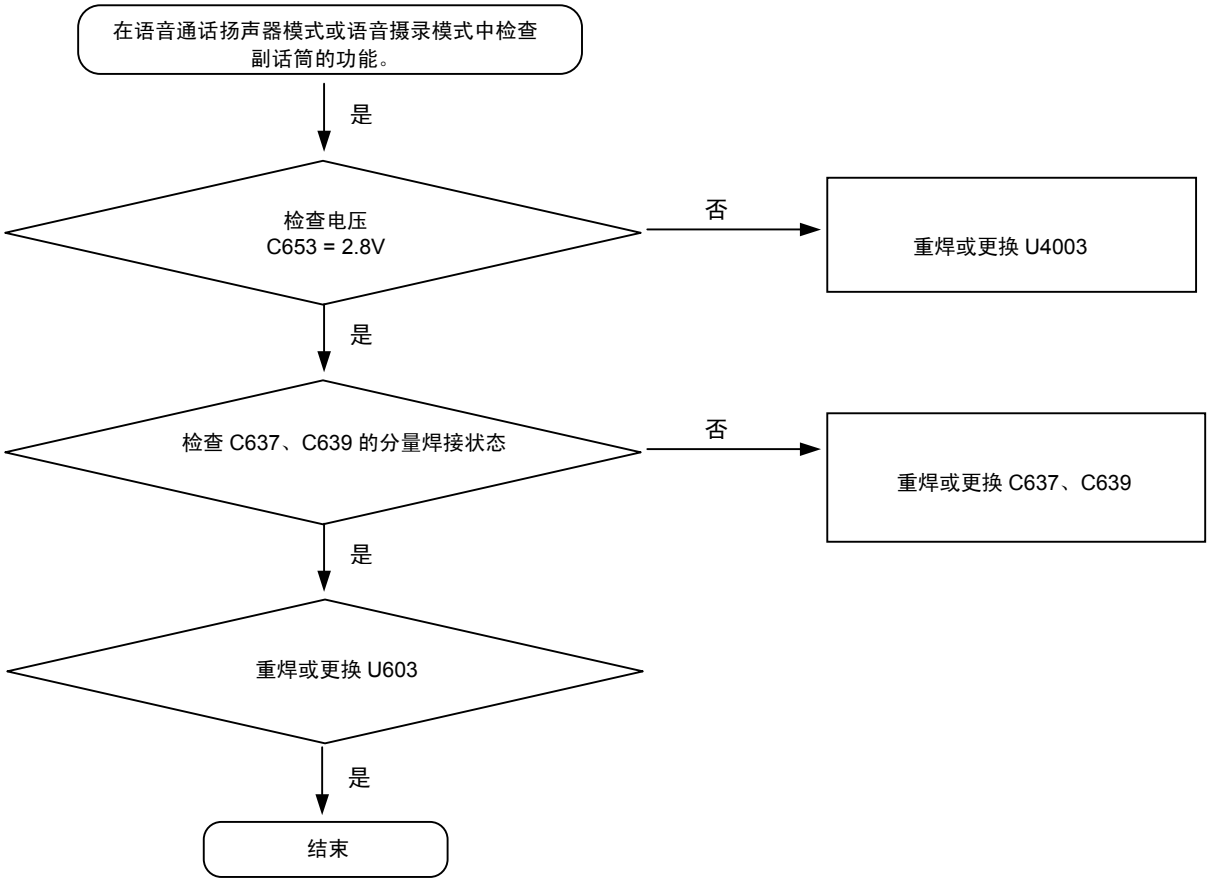

保密和所有权-本维修手册内容的变更恕不另行通知。
未经三星书面授权而发布，传送，或违背本文件中的任何内容或数据是严格禁止的。

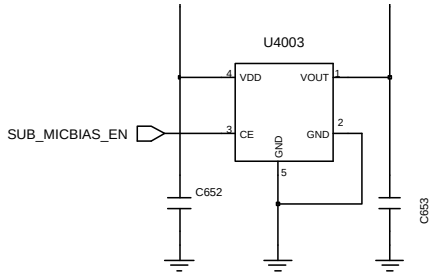

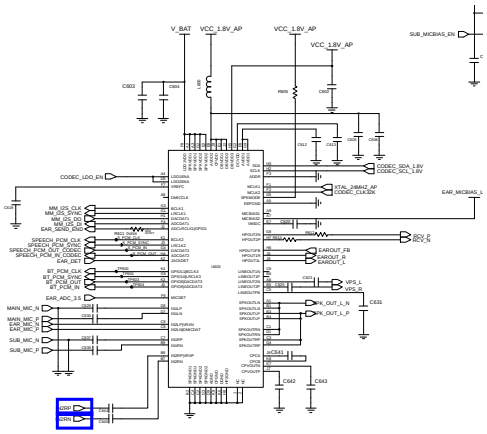

Audio Codec

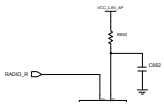

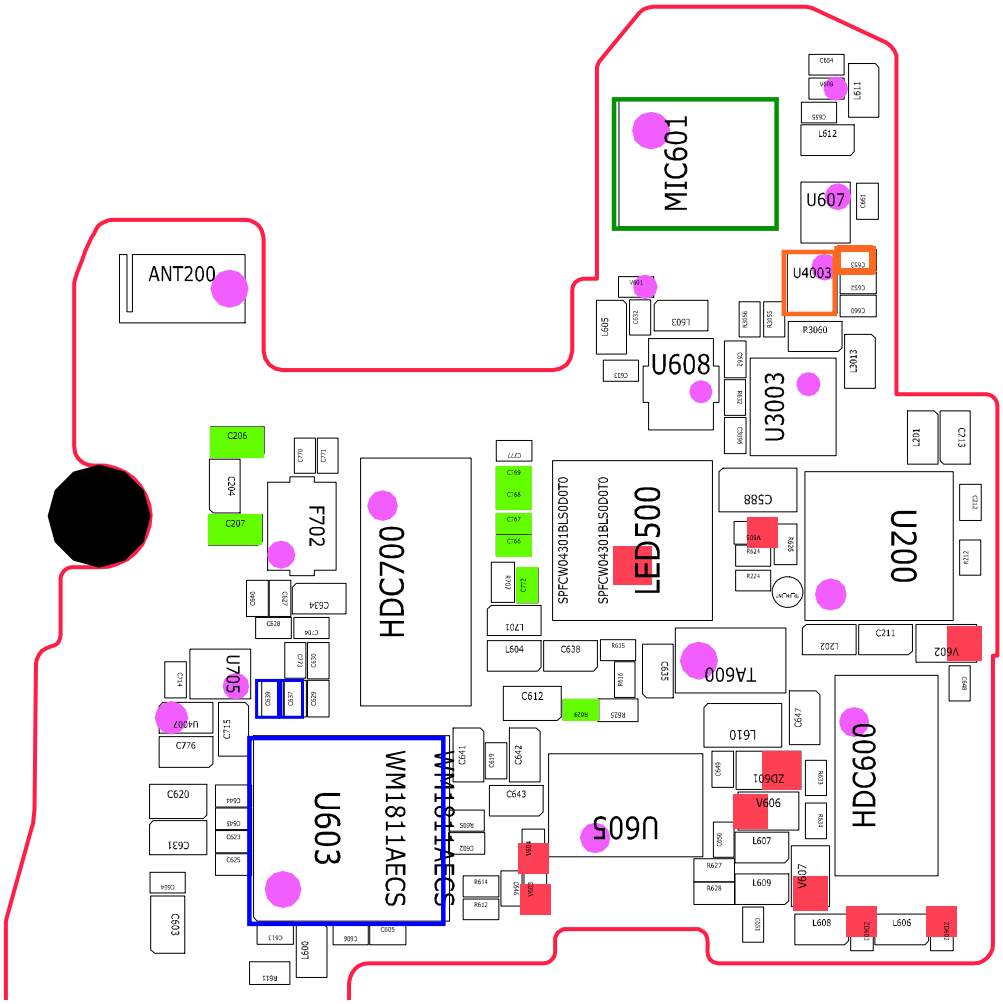

Confidential and proprietary-the contents in this service guide subject to change without prior notice.
Distribution, transmission, or infringement of any content or data from this document without Samsung's written authorization is strictly prohibited.

8-3-6-2.话筒部分（第 3 话筒）

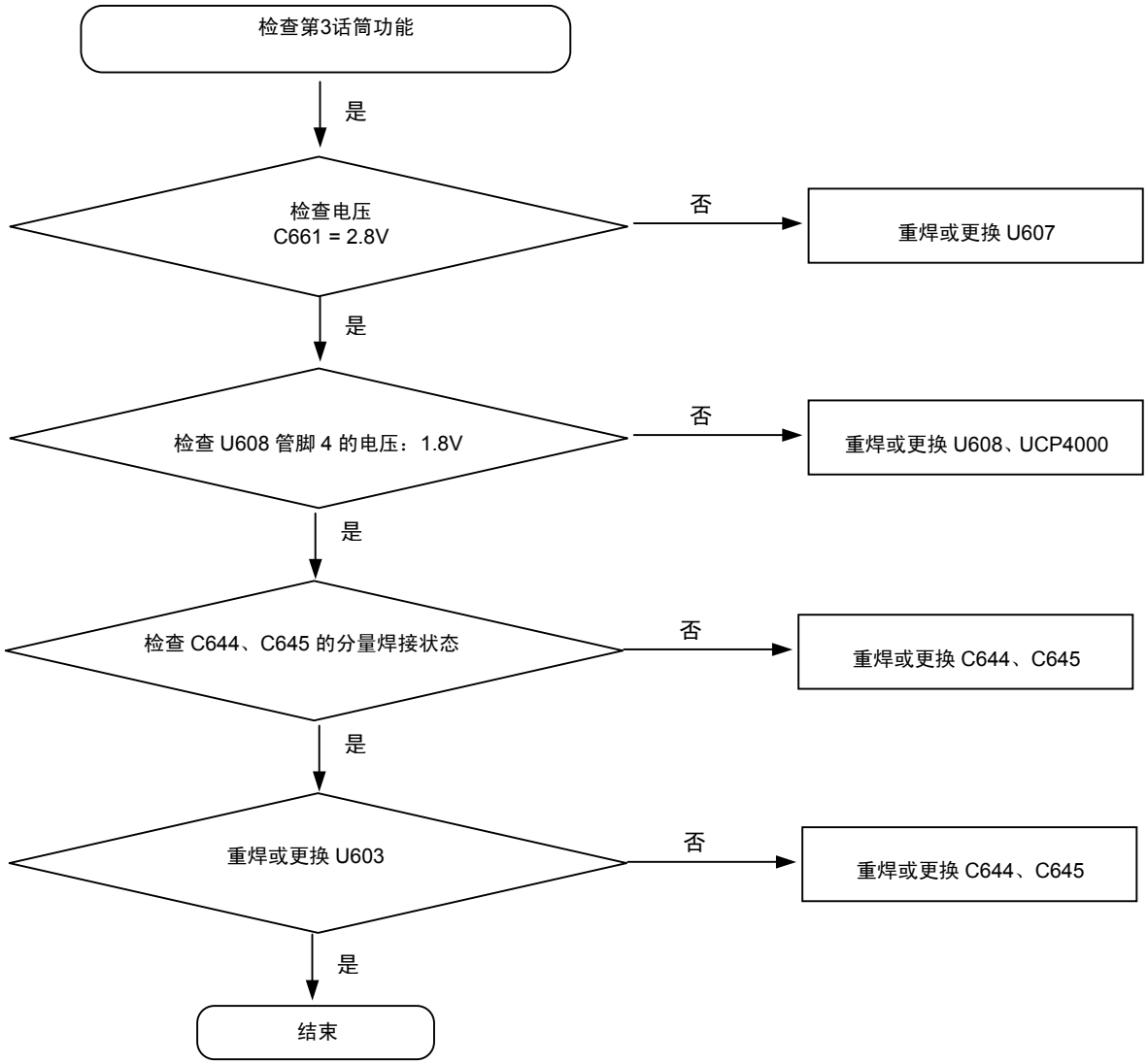

保密和所有权-本维修手册内容的变更恕不另行通知。
未经三星书面授权而发布，传送，或违背本文件中的任何内容或数据是严格禁止的。

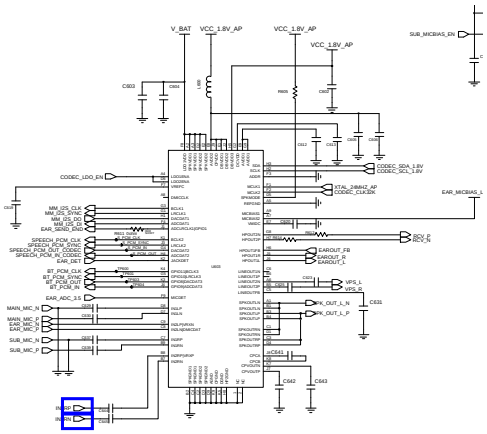

Audio Codec

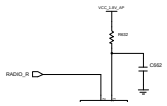

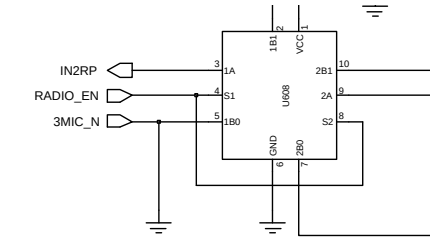

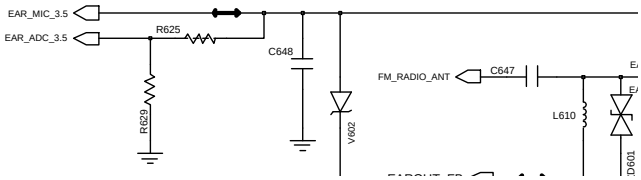

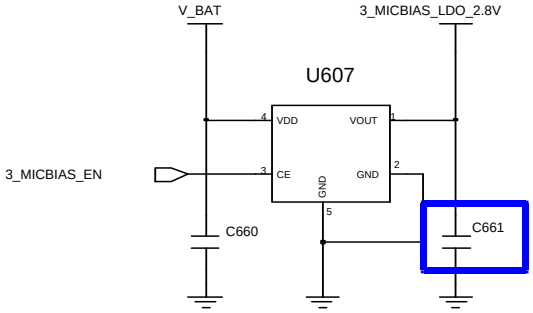

Confidential and proprietary-the contents in this service guide subject to change without prior notice.
Distribution, transmission, or infringement of any content or data from this document without Samsung's written authorization is strictly prohibited.

8-3-7.扬声器和耳机插口部分

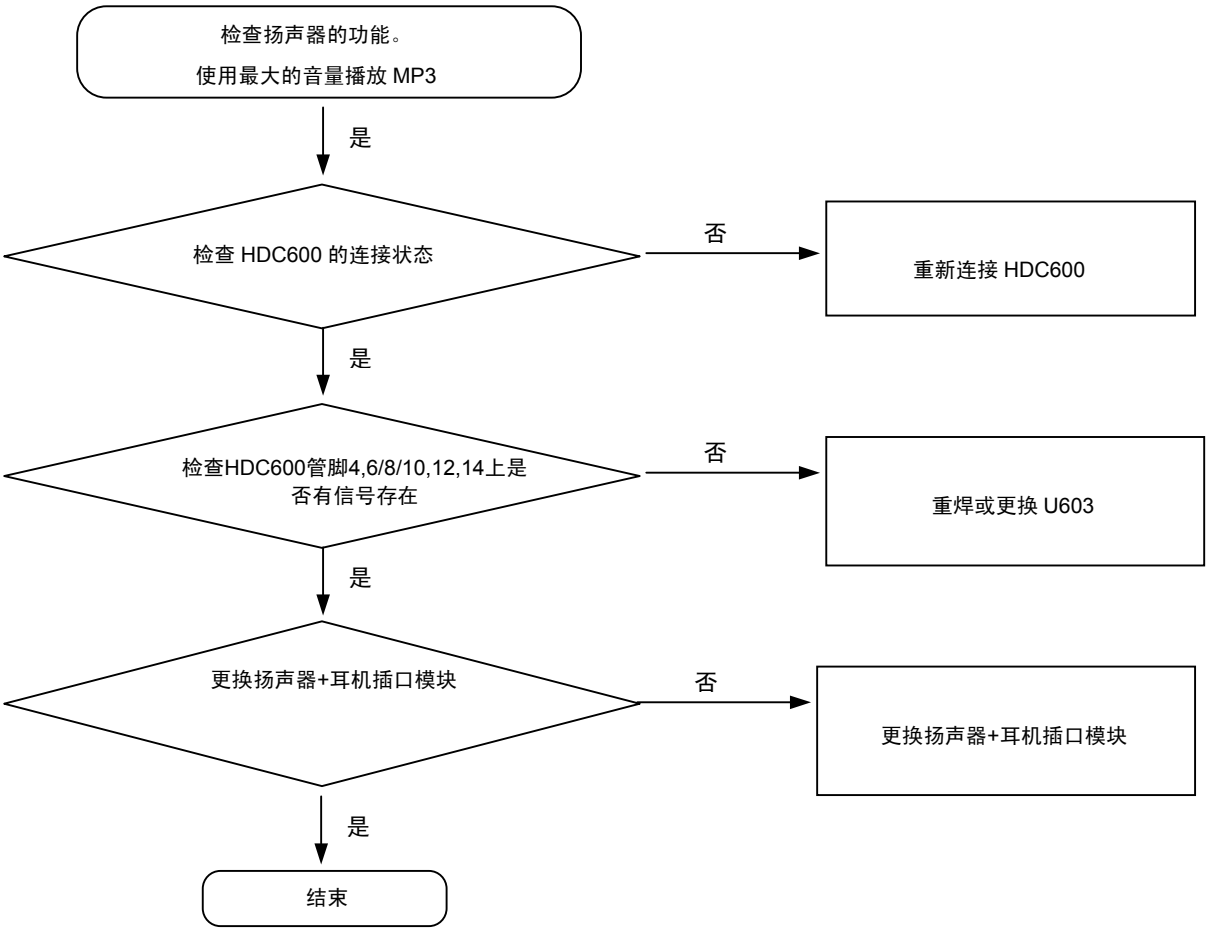

保密和所有权-本维修手册内容的变更恕不另行通知。
未经三星书面授权而发布，传送，或违背本文件中的任何内容或数据是严格禁止的。

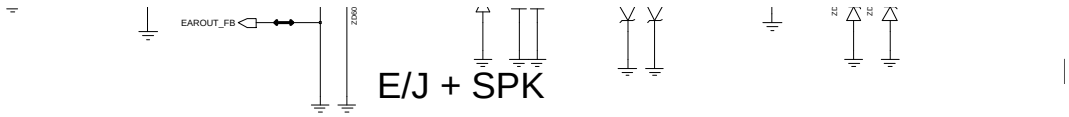

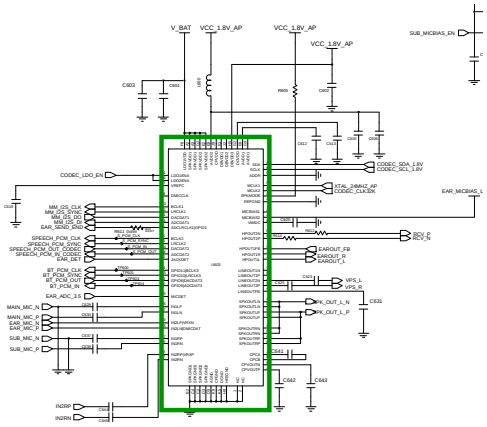

Audio Codec

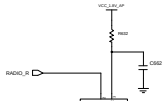

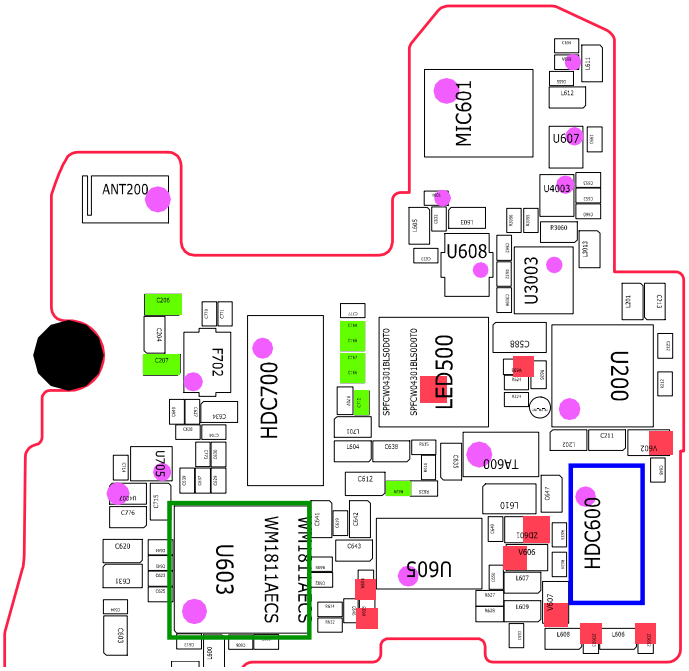

Confidential and proprietary-the contents in this service guide subject to change without prior notice.
Distribution, transmission, or infringement of any content or data from this document without Samsung's written authorization is strictly prohibited.

8-3-8.接收器部分

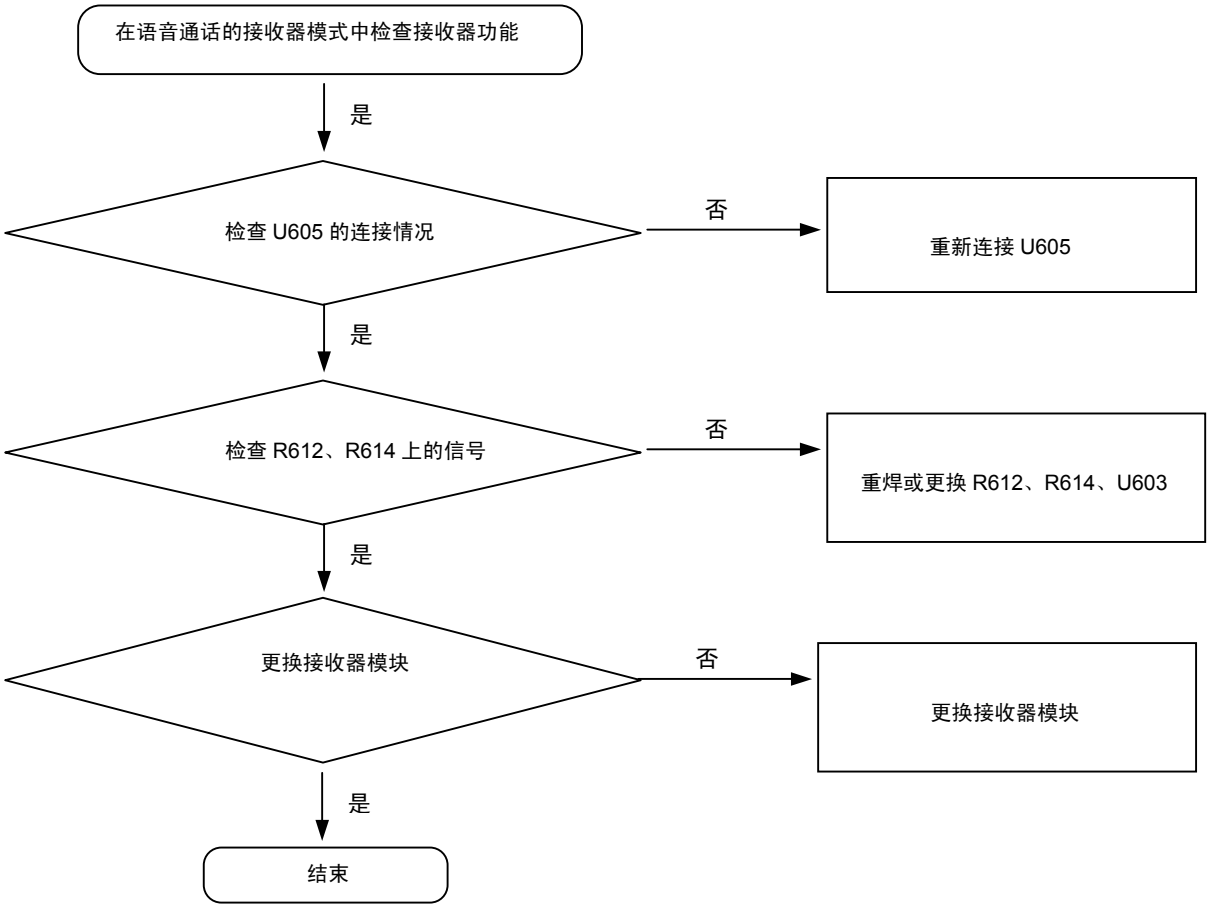

保密和所有权-本维修手册内容的变更恕不另行通知。
未经三星书面授权而发布，传送，或违背本文件中的任何内容或数据是严格禁止的。

RCV + SVC LED + VOL KE

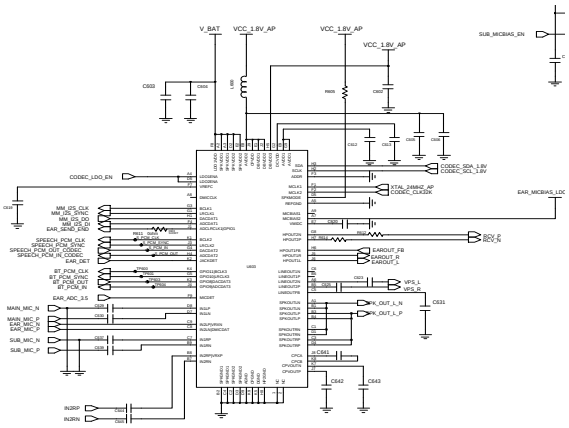

Audio Codec

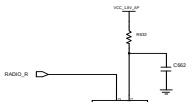

Confidential and proprietary-the contents in this service guide subject to change without prior notice.
Distribution, transmission, or infringement of any content or data from this document without Samsung's written authorization is strictly prohibited.

8-3-9.CDMA 接收器

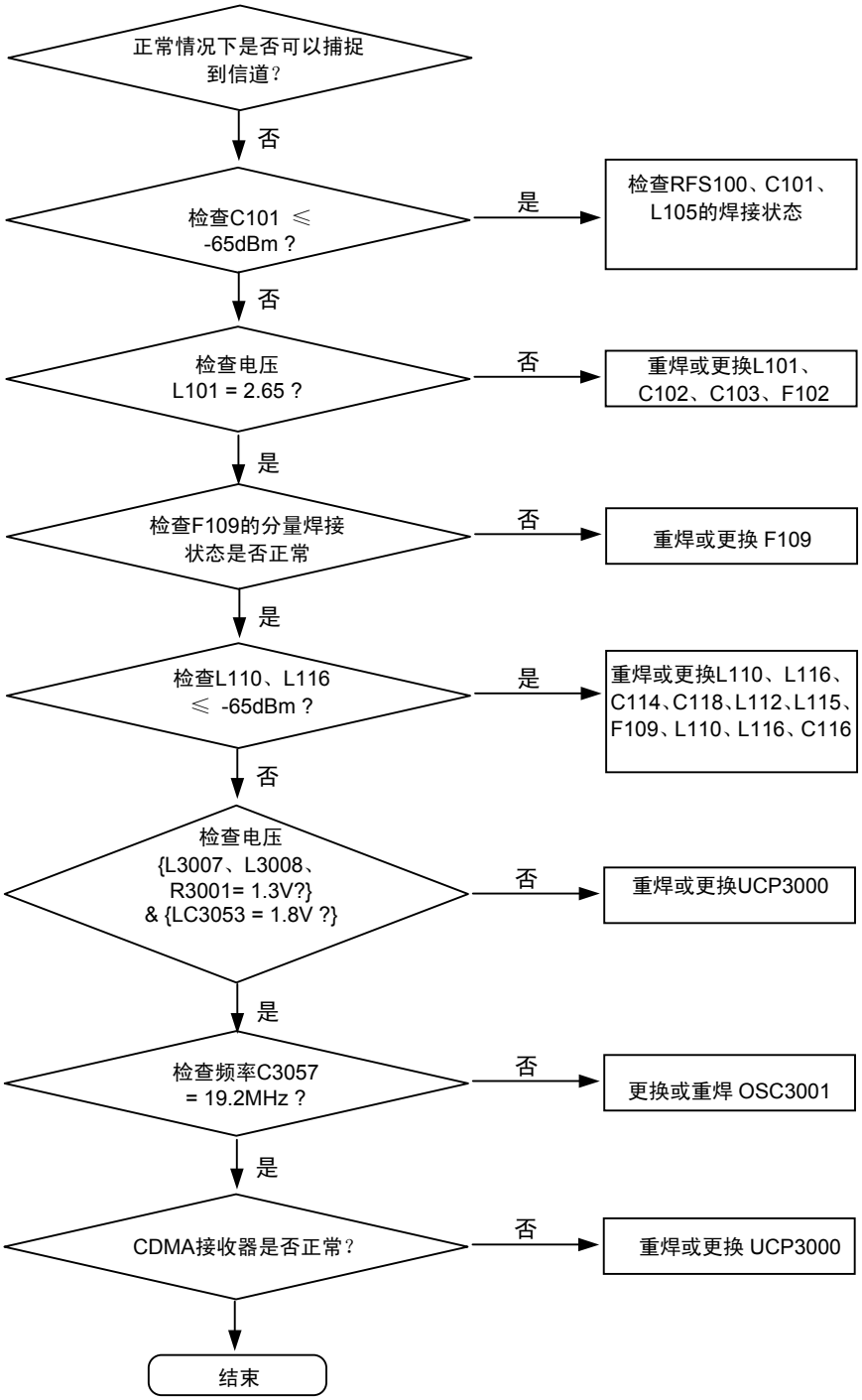

保密和所有权-本维修手册内容的变更恕不另行通知。
未经三星书面授权而发布，传送，或违背本文件中的任何内容或数据是严格禁止的。

SAMSUNG CONFIDENTIAL
THIS DOCUMENT CONTAINS CONFIDENTIAL
PROPRIETARY INFORMATION THAT IS
SAMSUNG ELECTRONICS CO'S PROPERTY.
DO NOT DISCLOSE TO OR DUPLICATE FOR OTHERS
EXCEPT AS AUTHORIZED BY SAMSUNG.

GSM RF & FEM

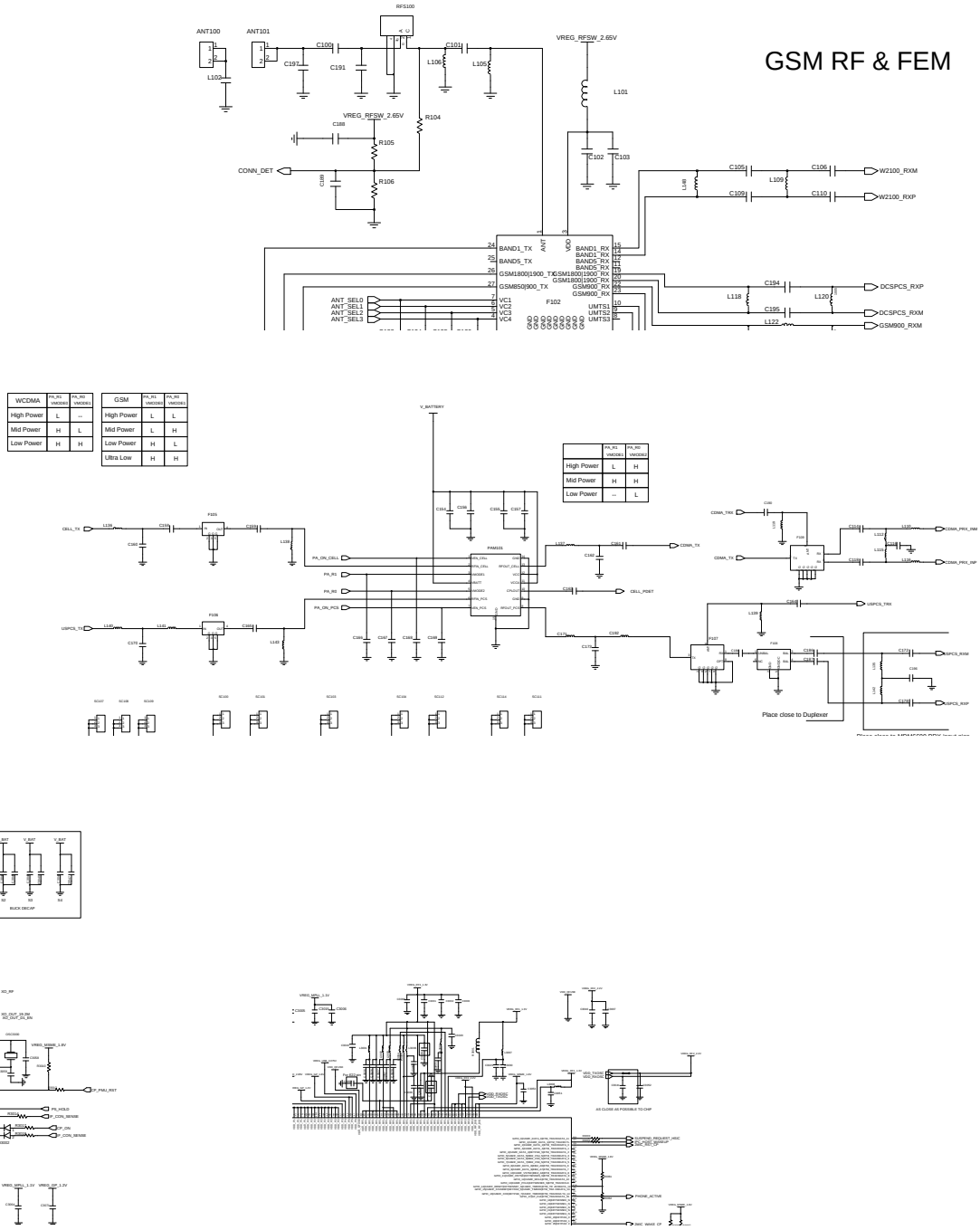

WCDMA	PA_R1 (VMODE0)	PA_R0 (VMODE1)
High Power	L	--
Mid Power	H	L
Low Power	H	H

GSM	PA_R1 (VMODE0)	PA_R0 (VMODE1)
High Power	L	L
Mid Power	L	H
Low Power	H	L
Ultra Low	H	H

	PA_R1 (VMODE0)	PA_R0 (VMODE1)
High Power	L	H
Mid Power	H	H
Low Power	--	L

Confidential and proprietary-the contents in this service guide subject to change without prior notice.
Distribution, transmission, or infringement of any content or data from this document without Samsung's written authorization is strictly prohibited.

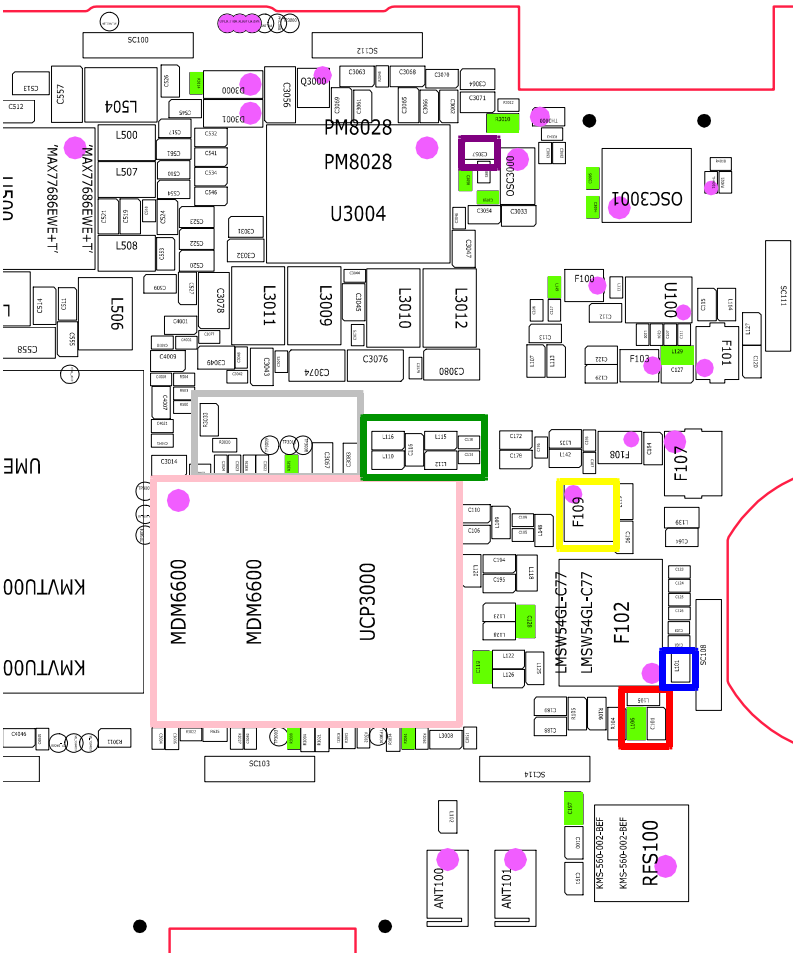

Confidential and proprietary-the contents in this service guide subject to change without prior notice.
Distribution, transmission, or infringement of any content or data from this document without Samsung's written authorization is strictly prohibited.

8-3-10.USPCS 接收器

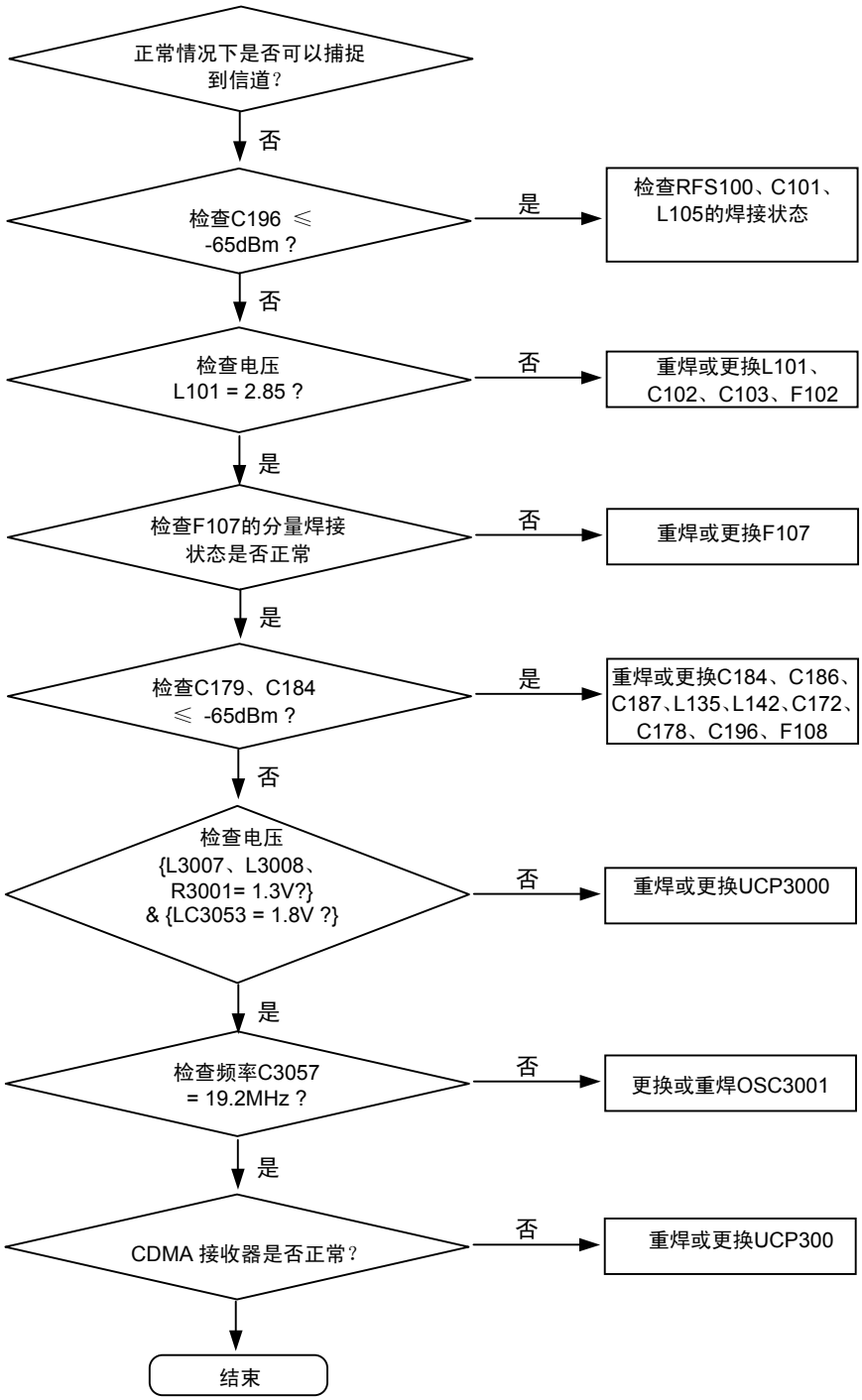

保密和所有权-本维修手册内容的变更恕不另行通知。
未经三星书面授权而发布，传送，或违背本文件中的任何内容或数据是严格禁止的。

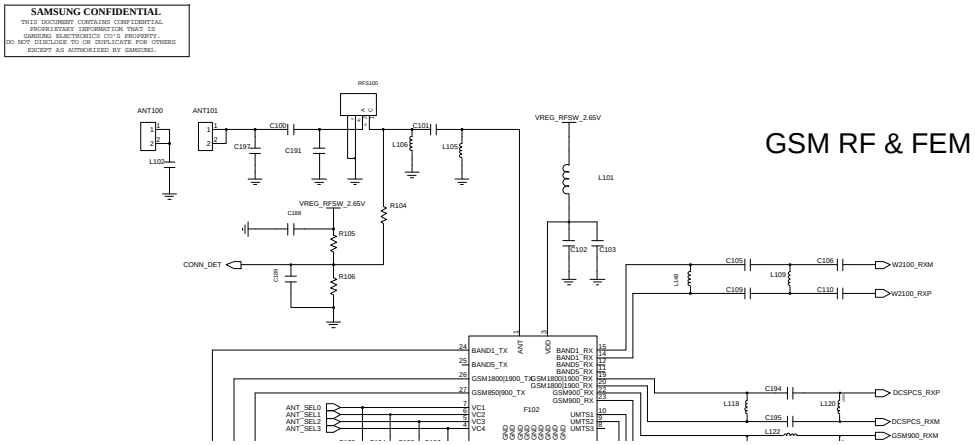

WCDMA	PA_R1 VMODE0	PA_R0 VMODE1
High Power	L	--
Mid Power	H	L
Low Power	H	H

GSM	PA_R1 VMODE0	PA_R0 VMODE1
High Power	L	L
Mid Power	L	H
Low Power	H	L
Ultra Low	H	H

	PA_R1 VMODE0	PA_R0 VMODE1
High Power	L	H
Mid Power	H	H
Low Power	--	L

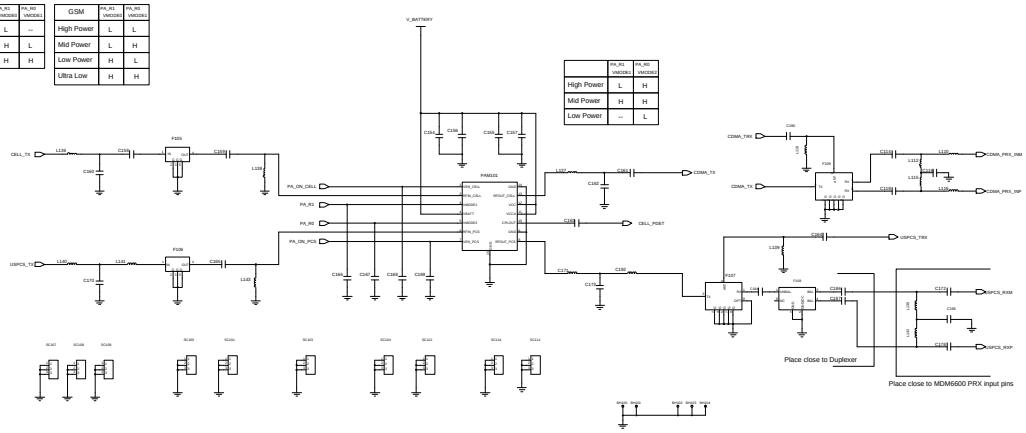

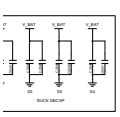

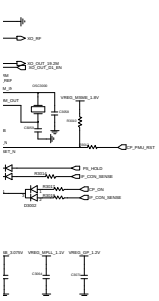

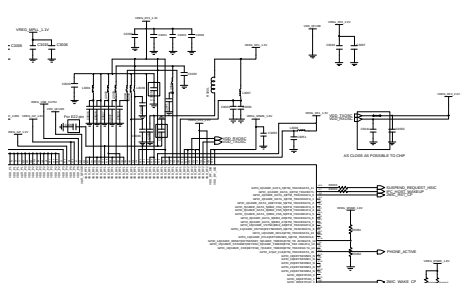

Confidential and proprietary-the contents in this service guide subject to change without prior notice.
Distribution, transmission, or infringement of any content or data from this document without Samsung's written authorization is strictly prohibited.

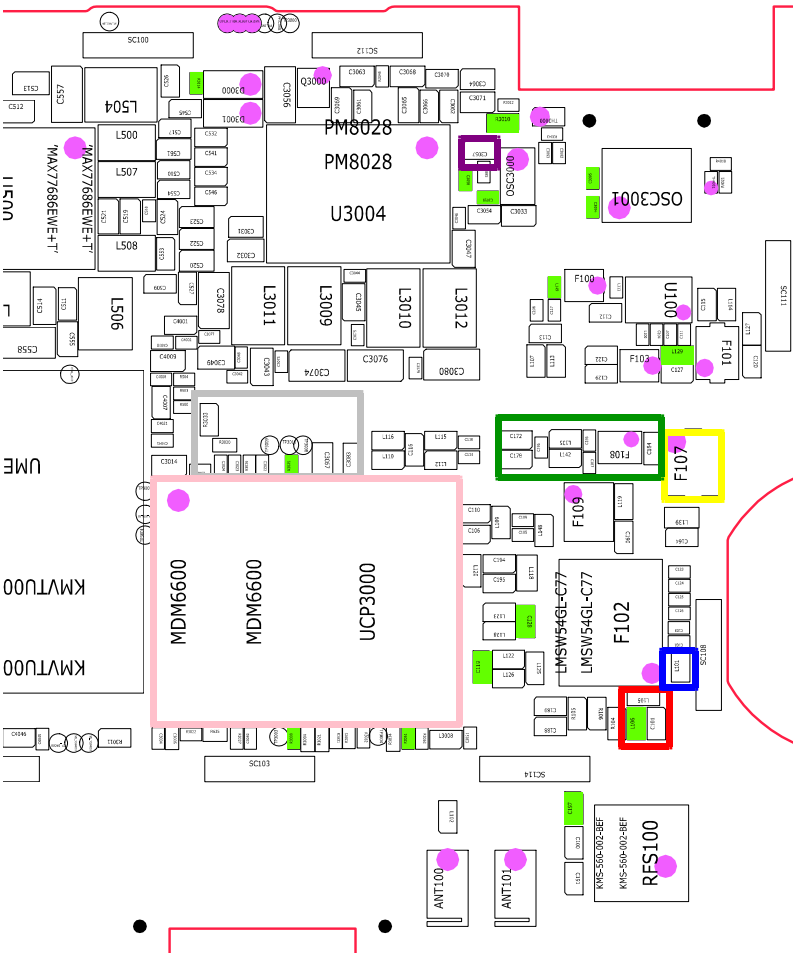

Confidential and proprietary-the contents in this service guide subject to change without prior notice.
Distribution, transmission, or infringement of any content or data from this document without Samsung's written authorization is strictly prohibited.

8-3-11.GPS

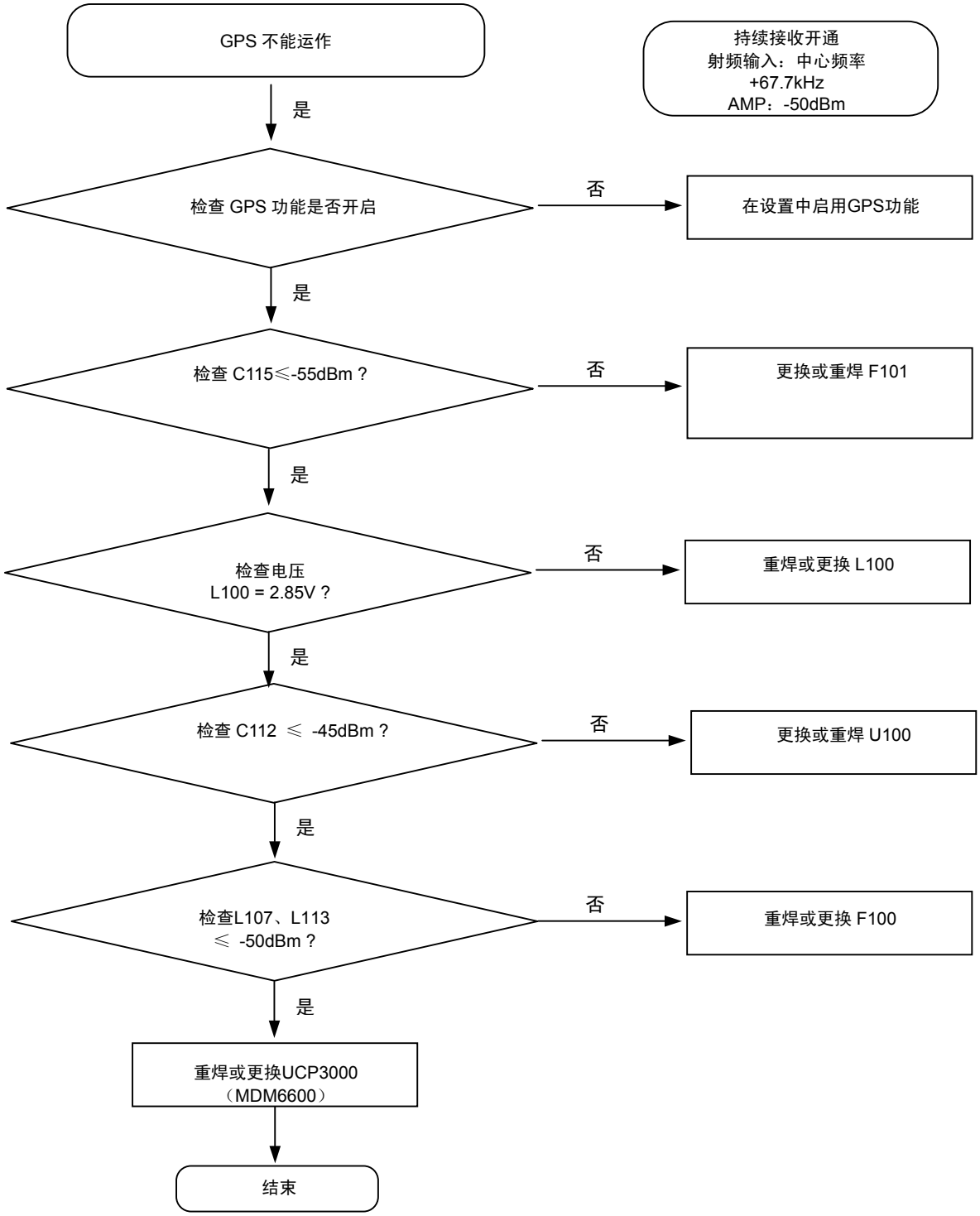

保密和所有权-本维修手册内容的变更恕不另行通知。
未经三星书面授权而发布，传送，或违背本文件中的任何内容或数据是严格禁止的。

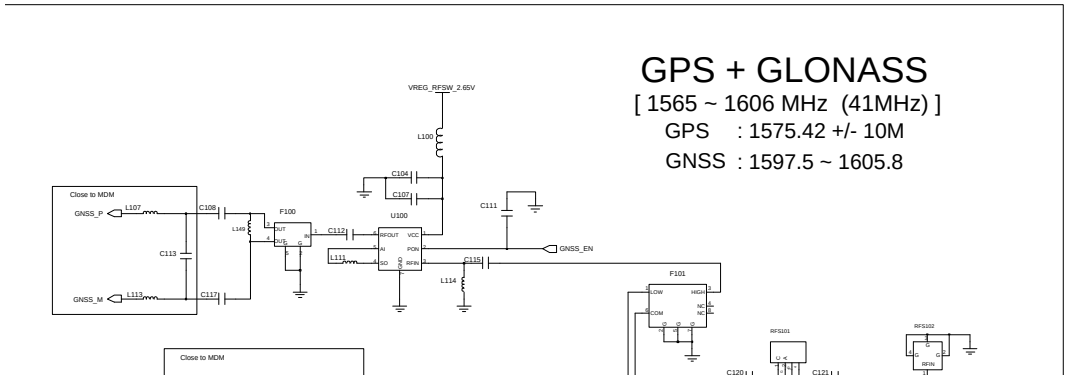

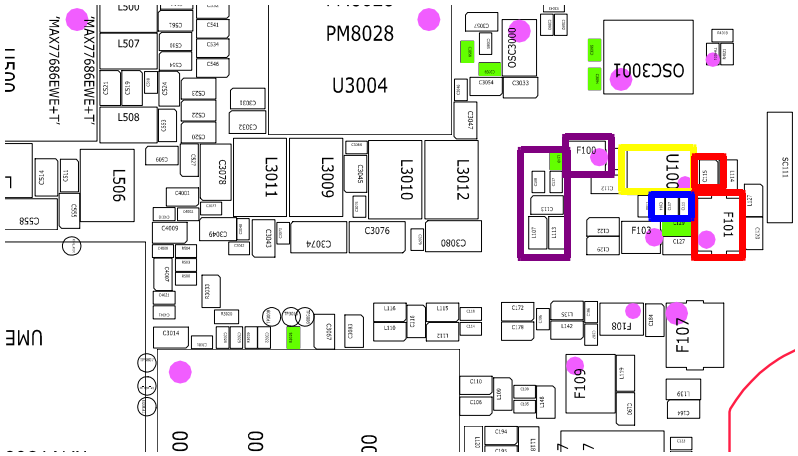

Confidential and proprietary-the contents in this service guide subject to change without prior notice.
Distribution, transmission, or infringement of any content or data from this document without Samsung's written authorization is strictly prohibited.

8-3-12.BT/WIFI

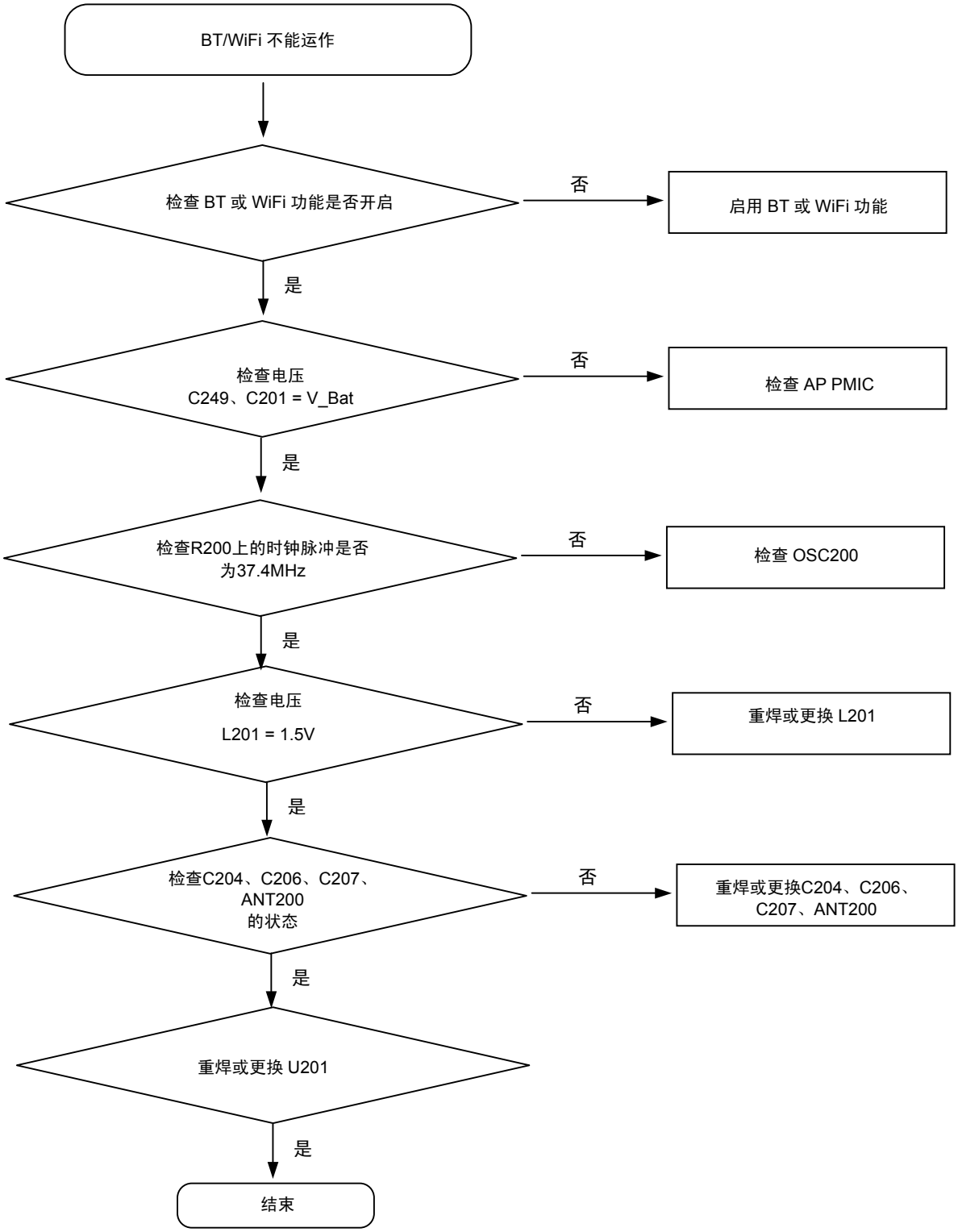

保密和所有权-本维修手册内容的变更恕不另行通知。
未经三星书面授权而发布，传送，或违背本文件中的任何内容或数据是严格禁止的。

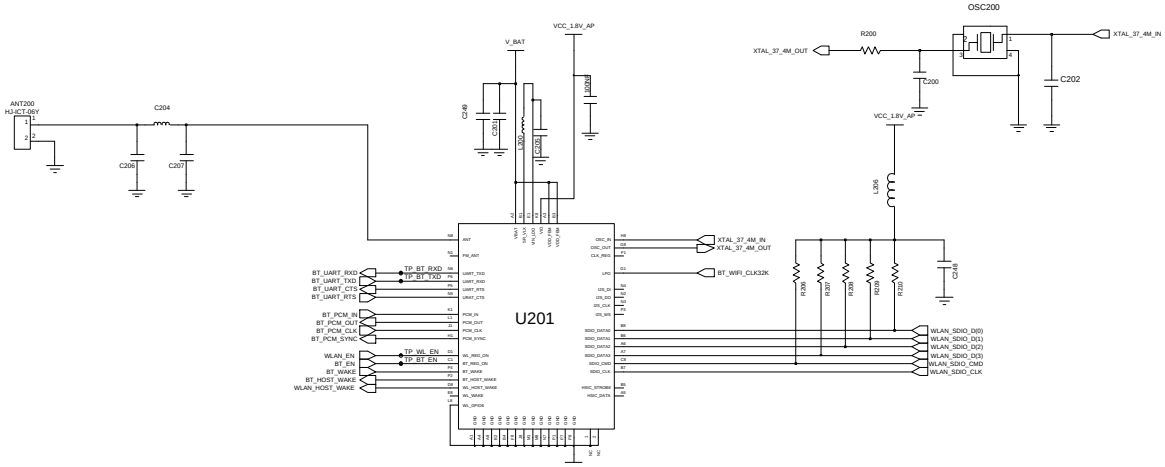

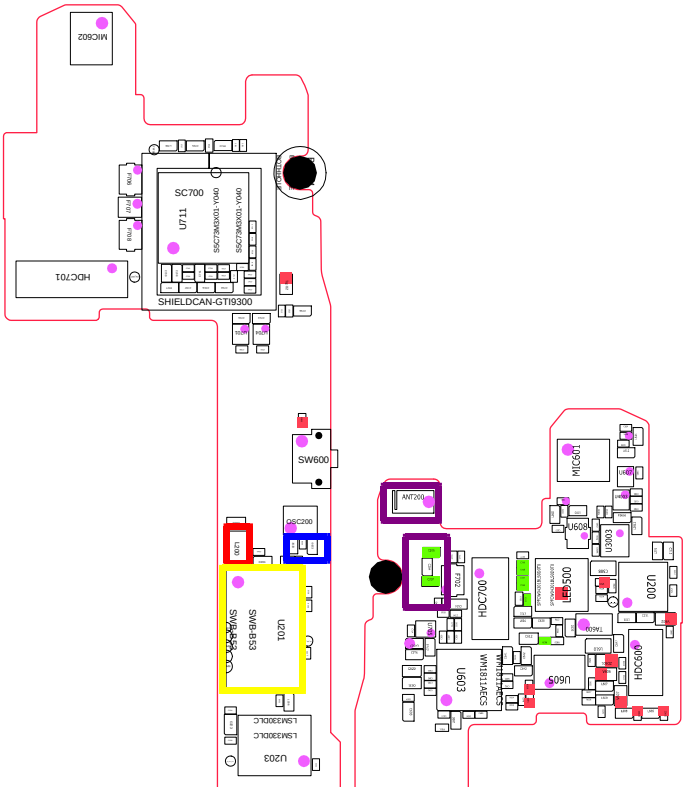

Confidential and proprietary-the contents in this service guide subject to change without prior notice.
Distribution, transmission, or infringement of any content or data from this document without Samsung's written authorization is strictly prohibited.

8-3-13.CDMA 发射器

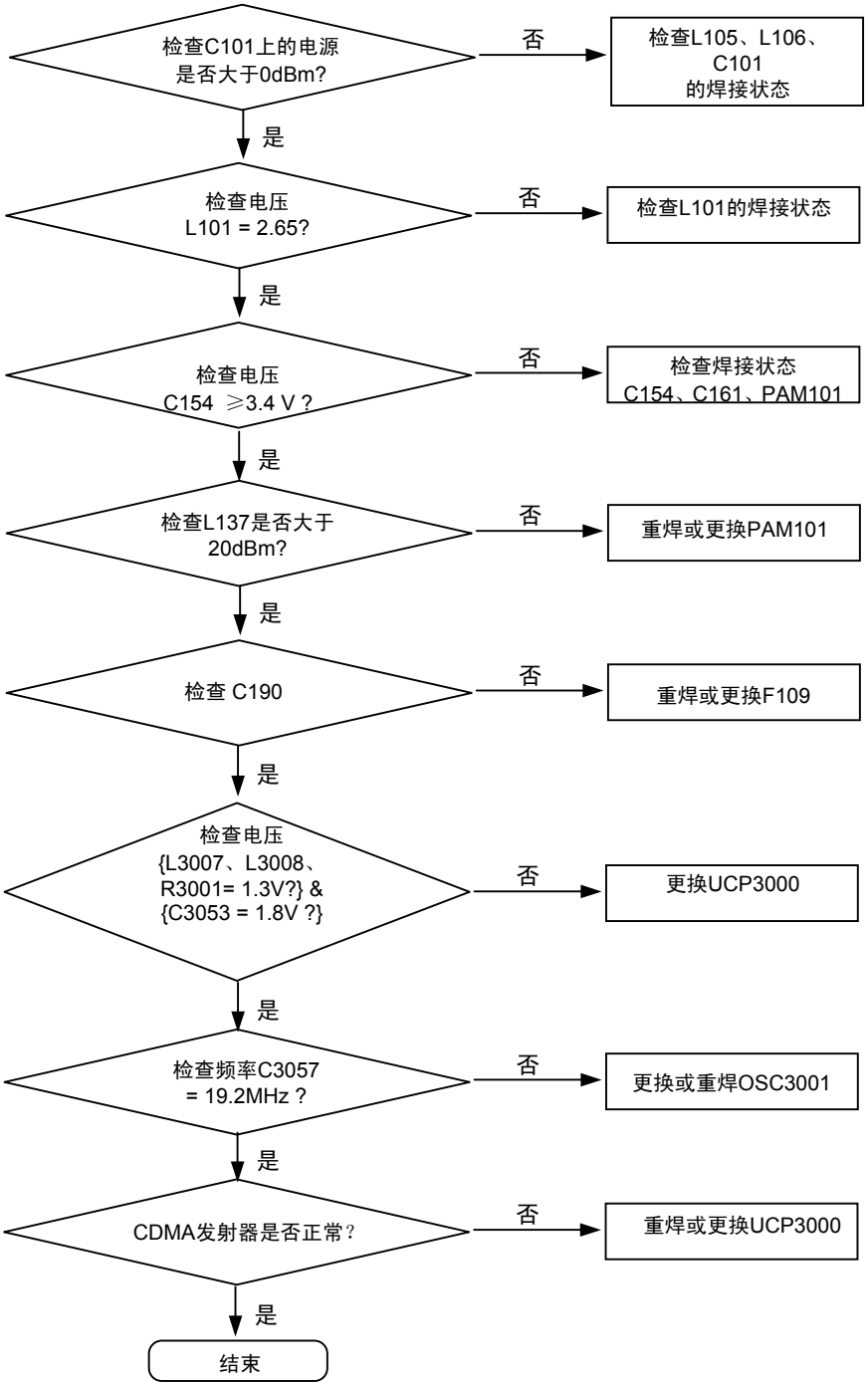

保密和所有权-本维修手册内容的变更恕不另行通知。
未经三星书面授权而发布，传送，或违背本文件中的任何内容或数据是严格禁止的。

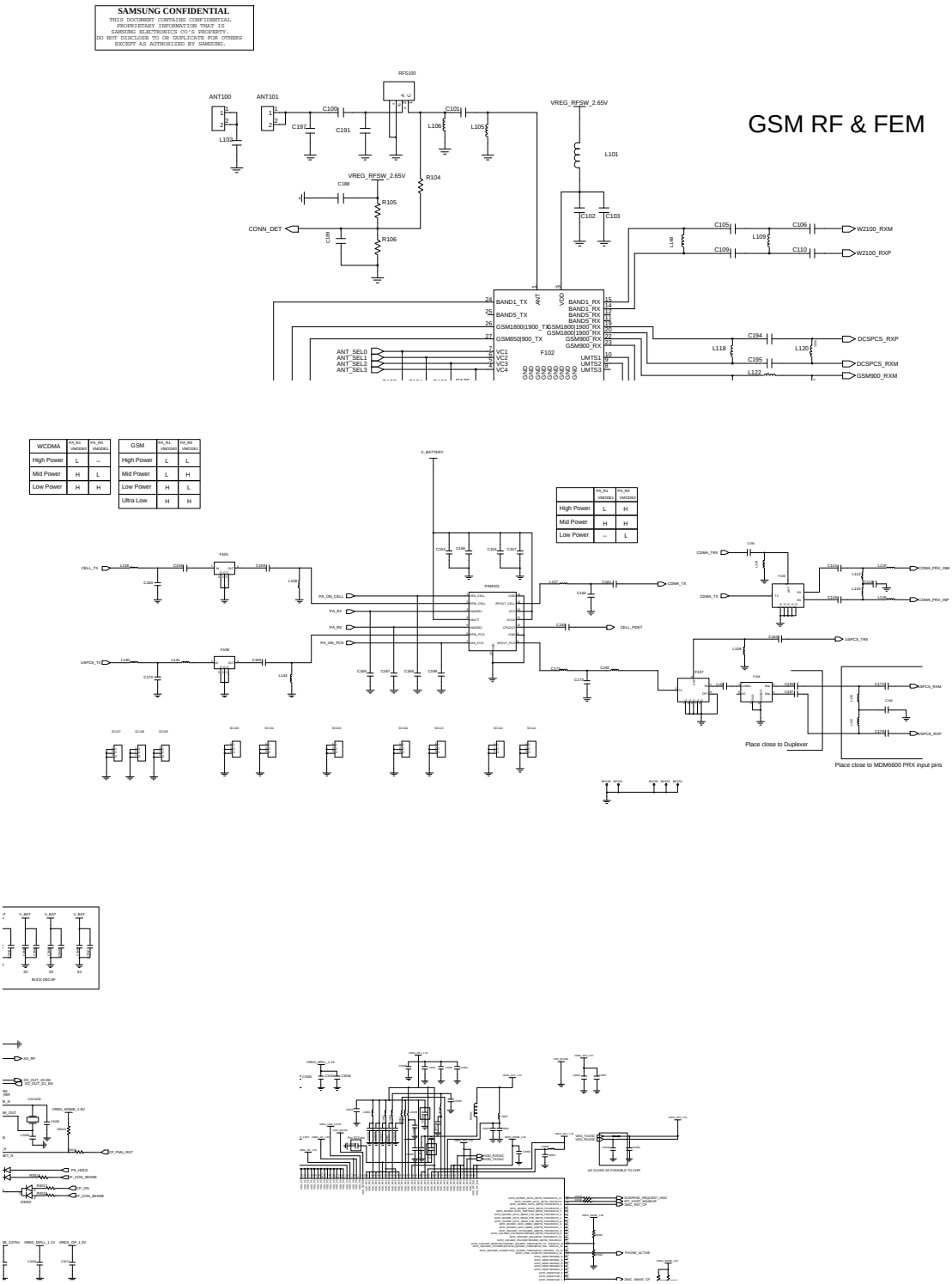

Confidential and proprietary-the contents in this service guide subject to change without prior notice.
Distribution, transmission, or infringement of any content or data from this document without Samsung's written authorization is strictly prohibited.

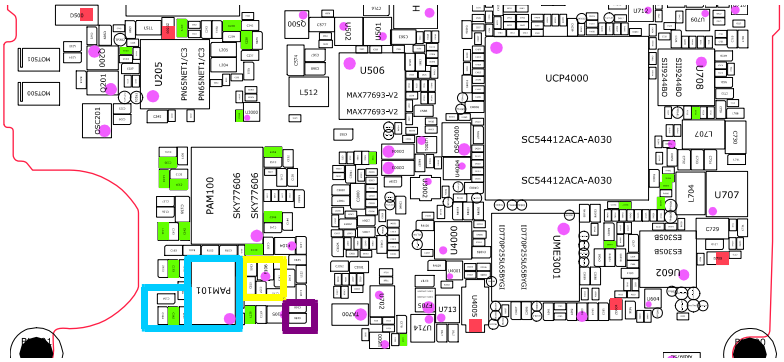

Confidential and proprietary-the contents in this service guide subject to change without prior notice.
Distribution, transmission, or infringement of any content or data from this document without Samsung's written authorization is strictly prohibited.

8-3-14.USPCS 发射器

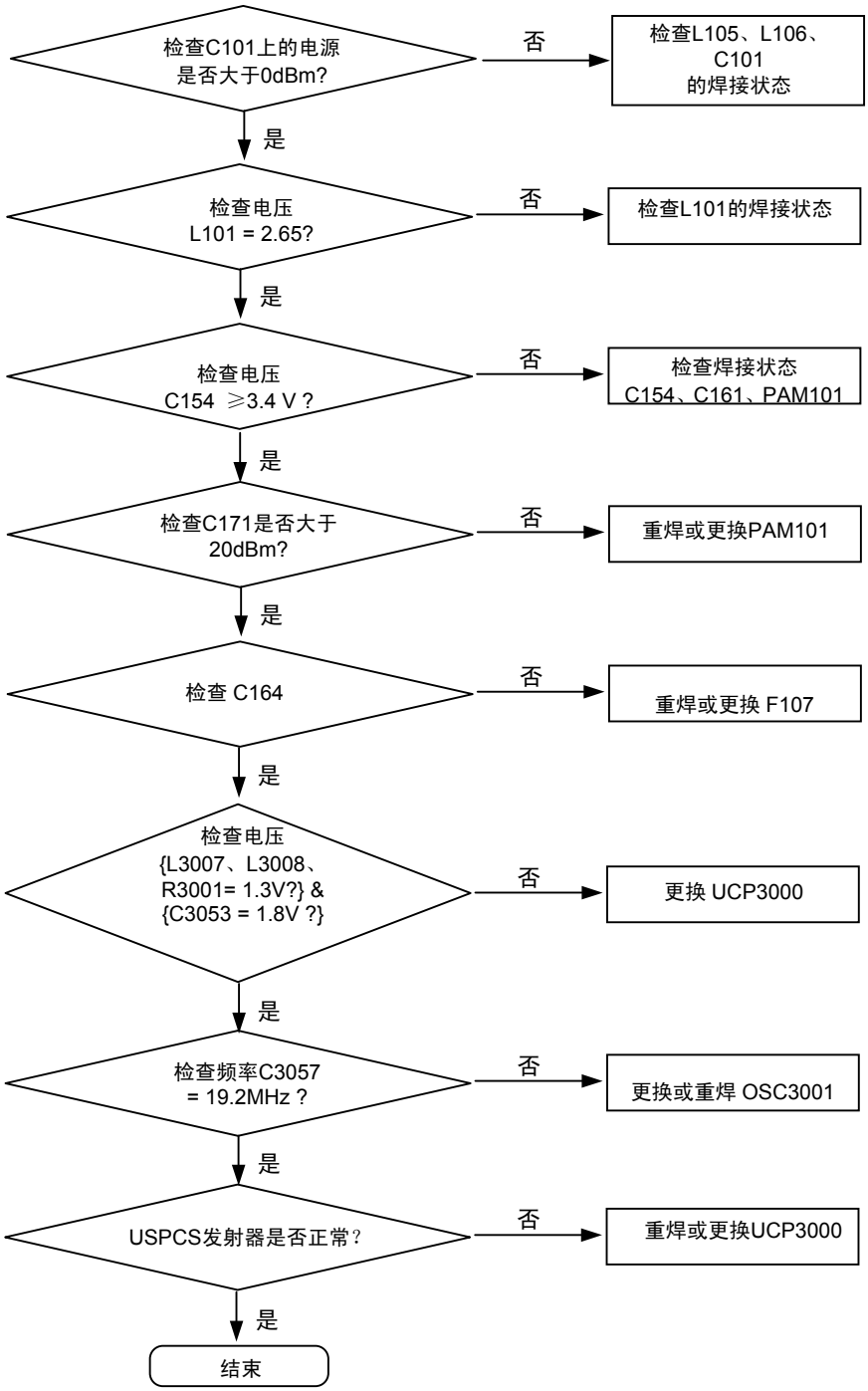

保密和所有权-本维修手册内容的变更恕不另行通知。
未经三星书面授权而发布，传送，或违背本文件中的任何内容或数据是严格禁止的。

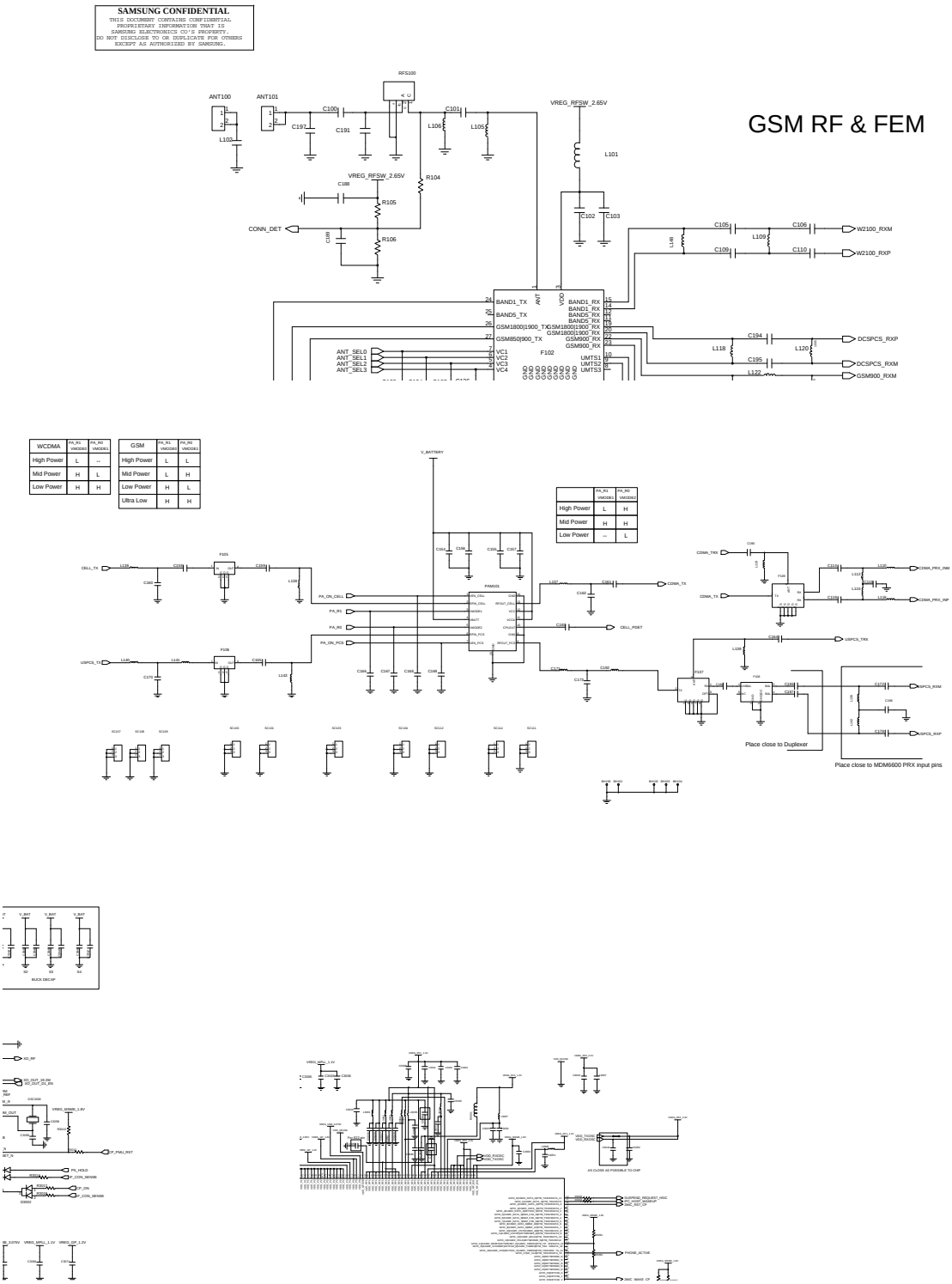

Confidential and proprietary-the contents in this service guide subject to change without prior notice.
Distribution, transmission, or infringement of any content or data from this document without Samsung's written authorization is strictly prohibited.

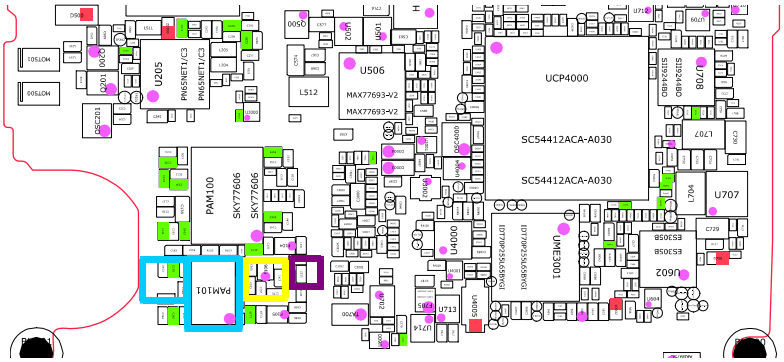

Confidential and proprietary-the contents in this service guide subject to change without prior notice.
Distribution, transmission, or infringement of any content or data from this document without Samsung's written authorization is strictly prohibited.

8-3-15.FM 收音机

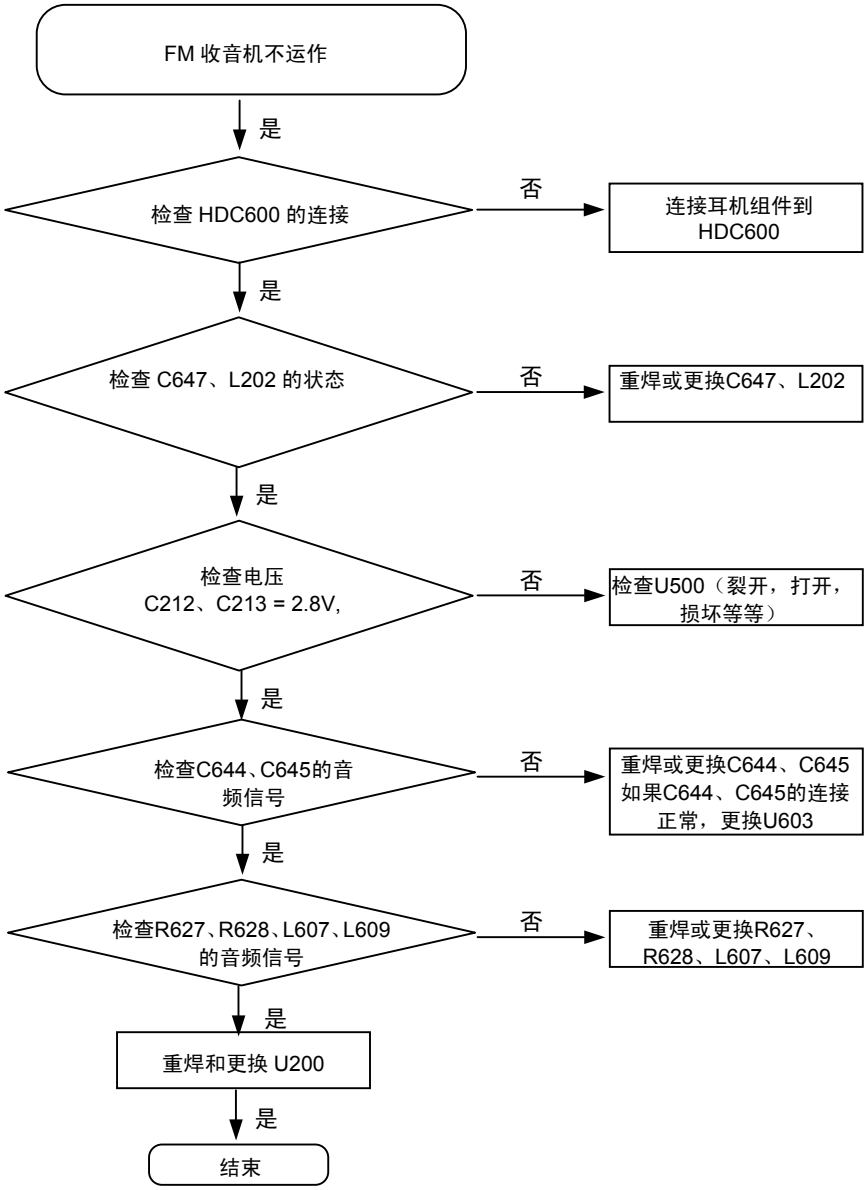

保密和所有权-本维修手册内容的变更恕不另行通知。
未经三星书面授权而发布，传送，或违背本文件中的任何内容或数据是严格禁止的。

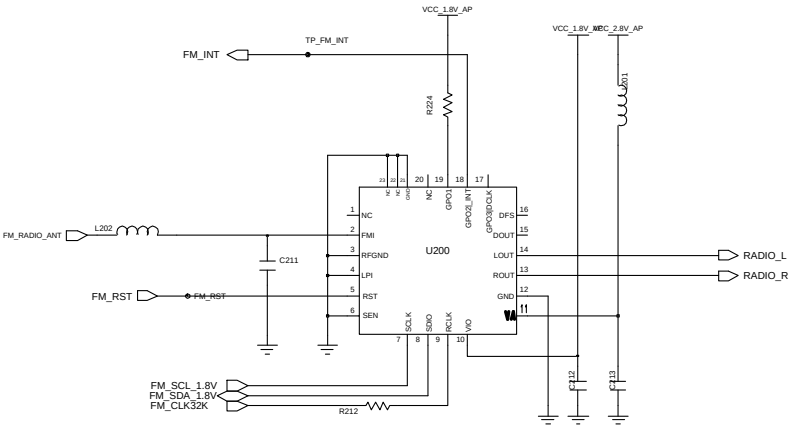

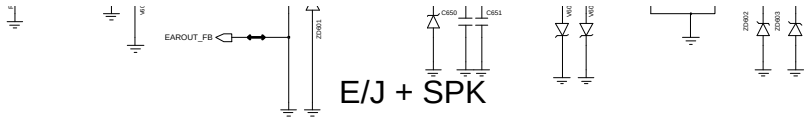

E/J + SPK

RCV +

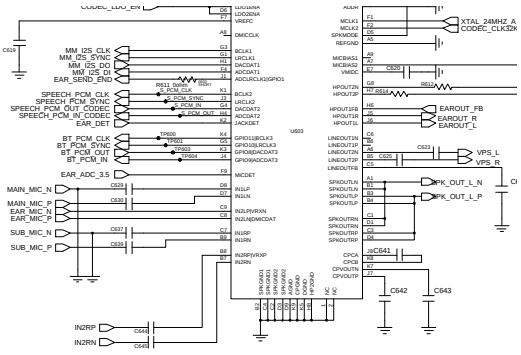

Audio Codec

Confidential and proprietary-the contents in this service guide subject to change without prior notice.
Distribution, transmission, or infringement of any content or data from this document without Samsung's written authorization is strictly prohibited.

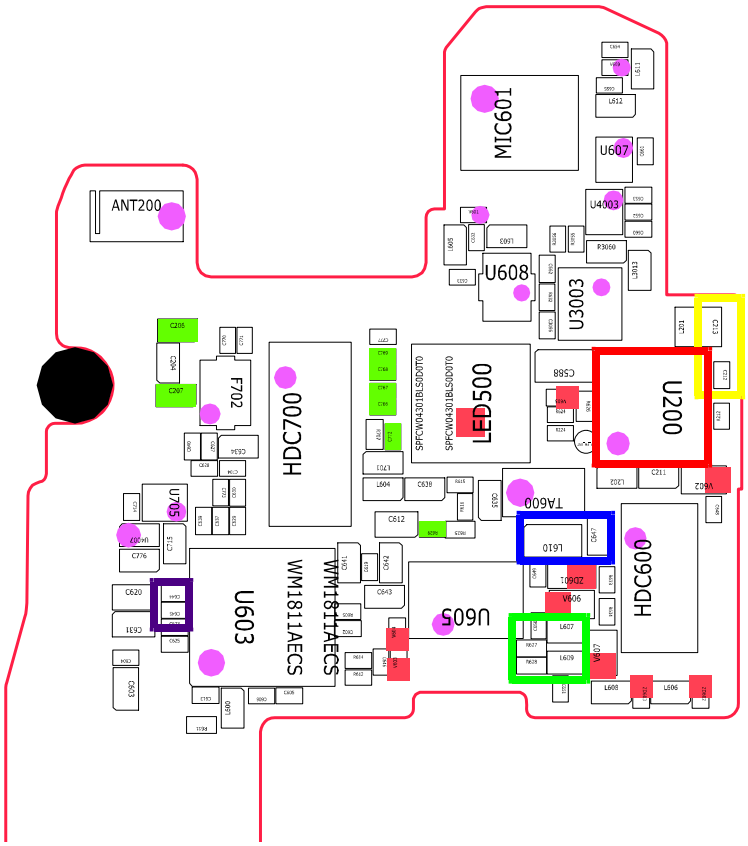

Confidential and proprietary-the contents in this service guide subject to change without prior notice.
Distribution, transmission, or infringement of any content or data from this document without Samsung's written authorization is strictly prohibited.

8-3-16.OLED

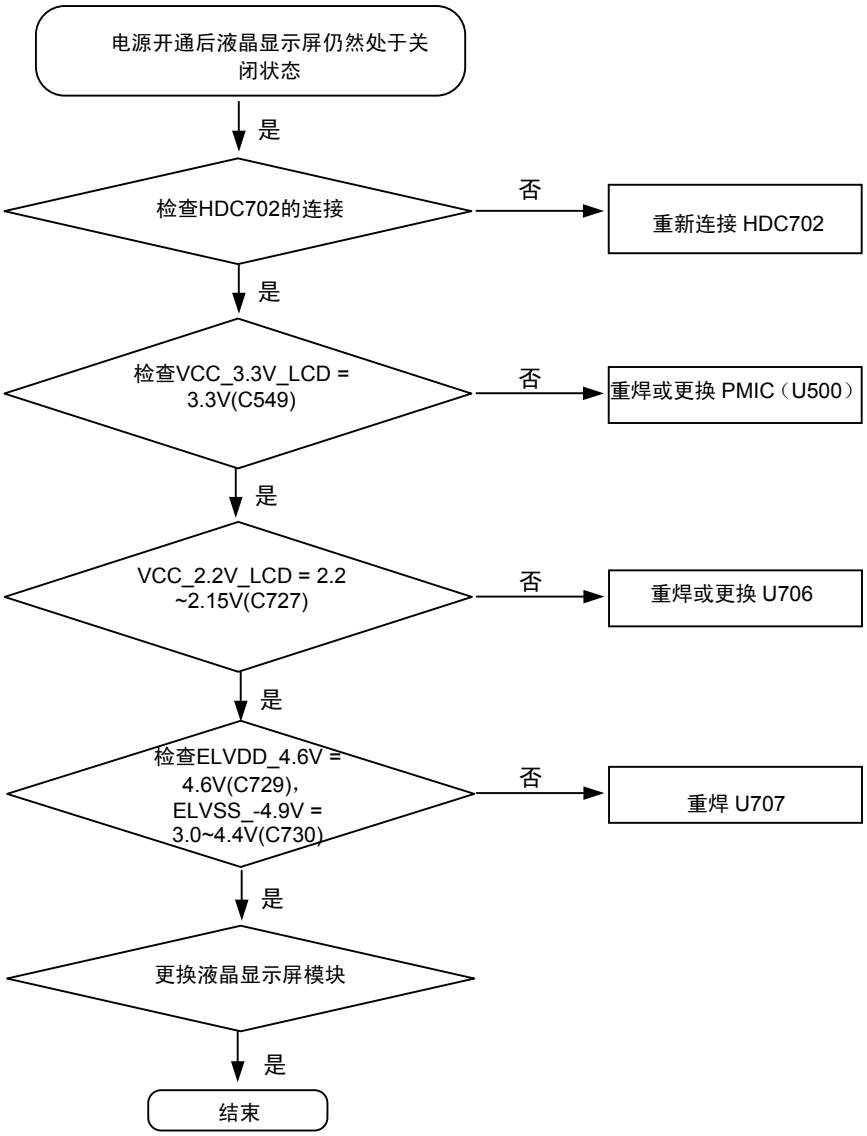

保密和所有权-本维修手册内容的变更恕不另行通知。
未经三星书面授权而发布，传送，或违背本文件中的任何内容或数据是严格禁止的。

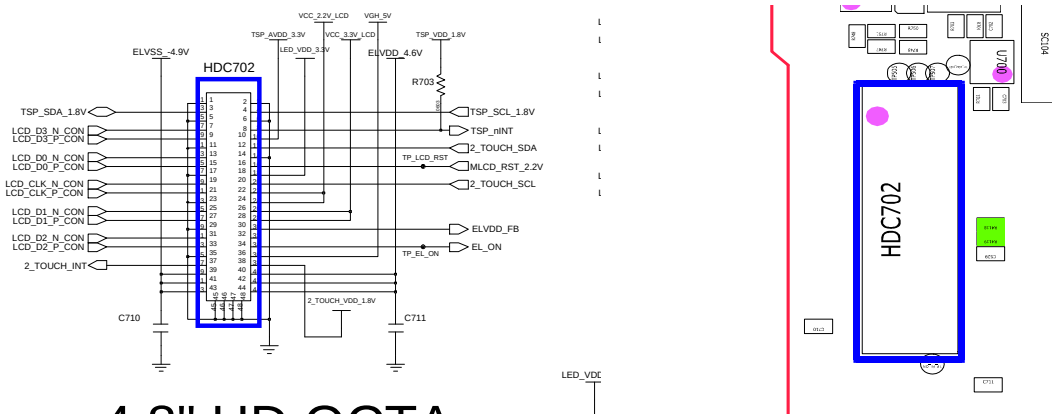

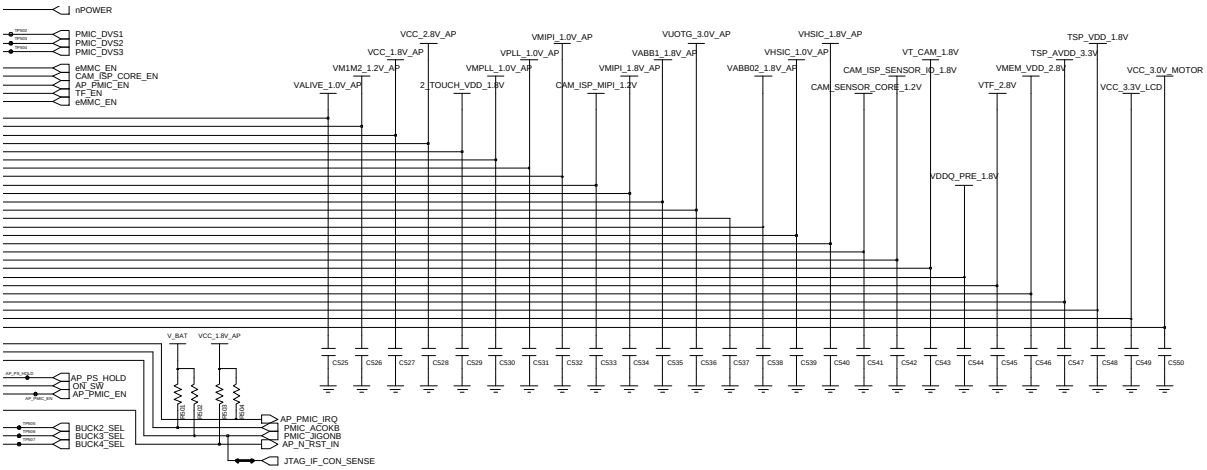

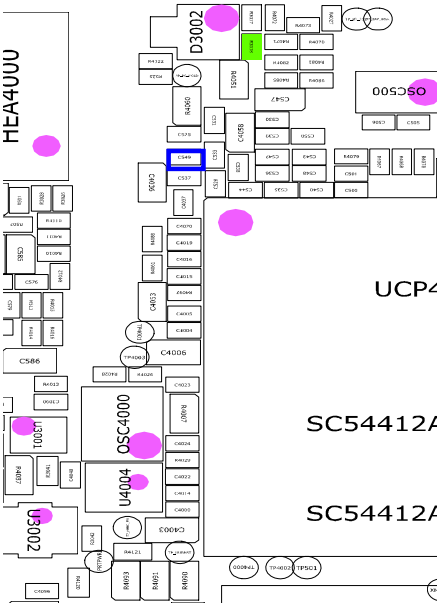

Confidential and proprietary-the contents in this service guide subject to change without prior notice.
Distribution, transmission, or infringement of any content or data from this document without Samsung's written authorization is strictly prohibited.

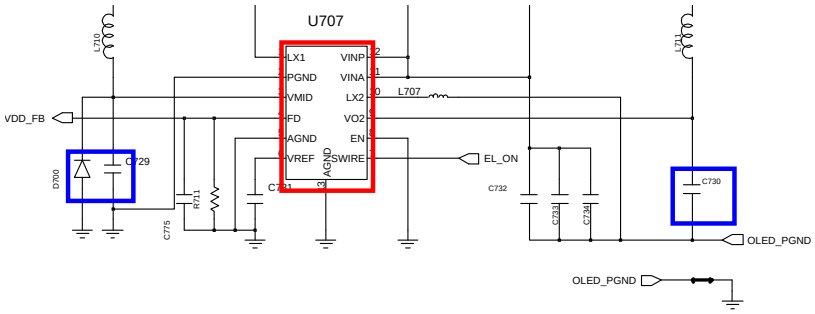

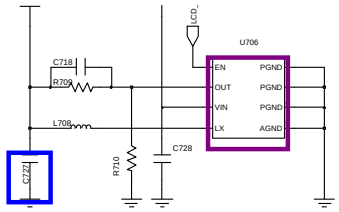

Confidential and proprietary-the contents in this service guide subject to change without prior notice.
Distribution, transmission, or infringement of any content or data from this document without Samsung's written authorization is strictly prohibited.

8-3-17.TSP

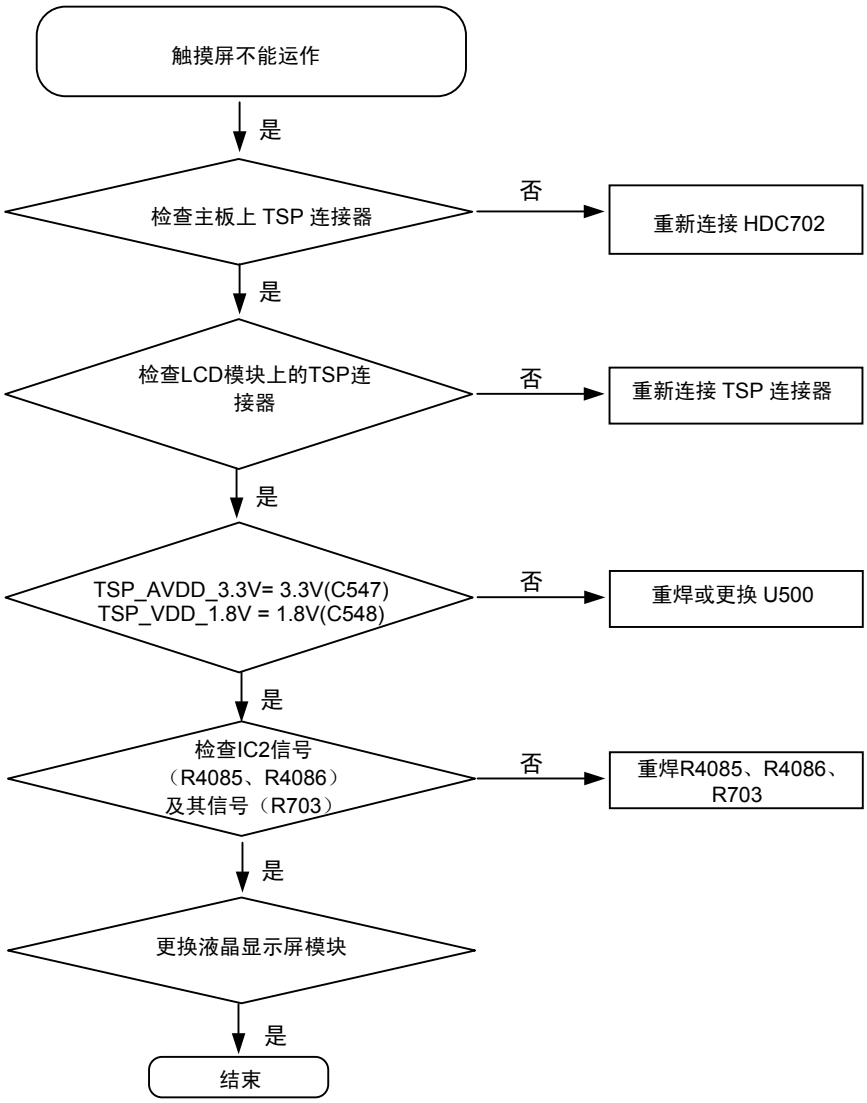

保密和所有权-本维修手册内容的变更恕不另行通知。
未经三星书面授权而发布，传送，或违背本文件中的任何内容或数据是严格禁止的。

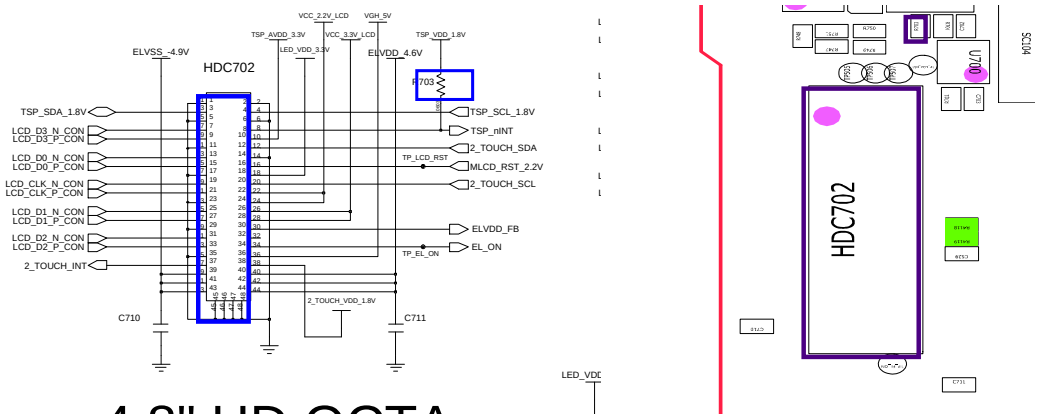

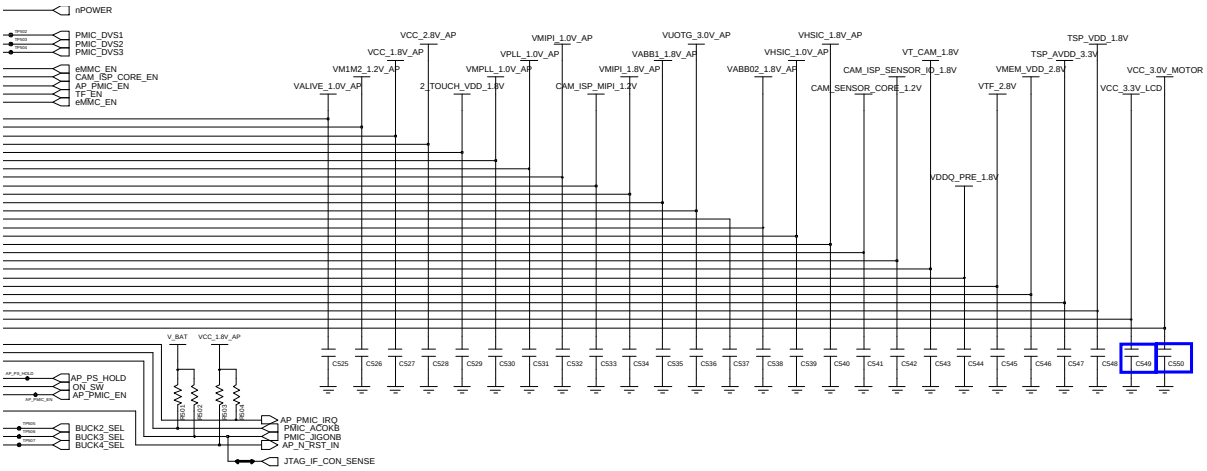

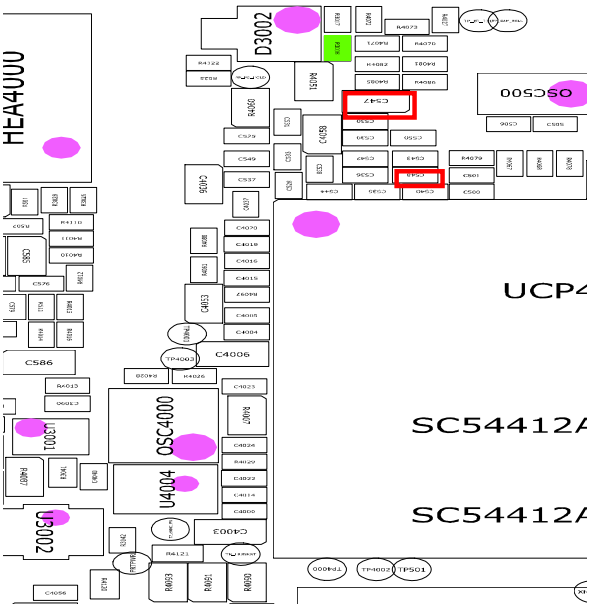

Confidential and proprietary-the contents in this service guide subject to change without prior notice.
Distribution, transmission, or infringement of any content or data from this document without Samsung's written authorization is strictly prohibited.

8-3-18.8M 摄像头

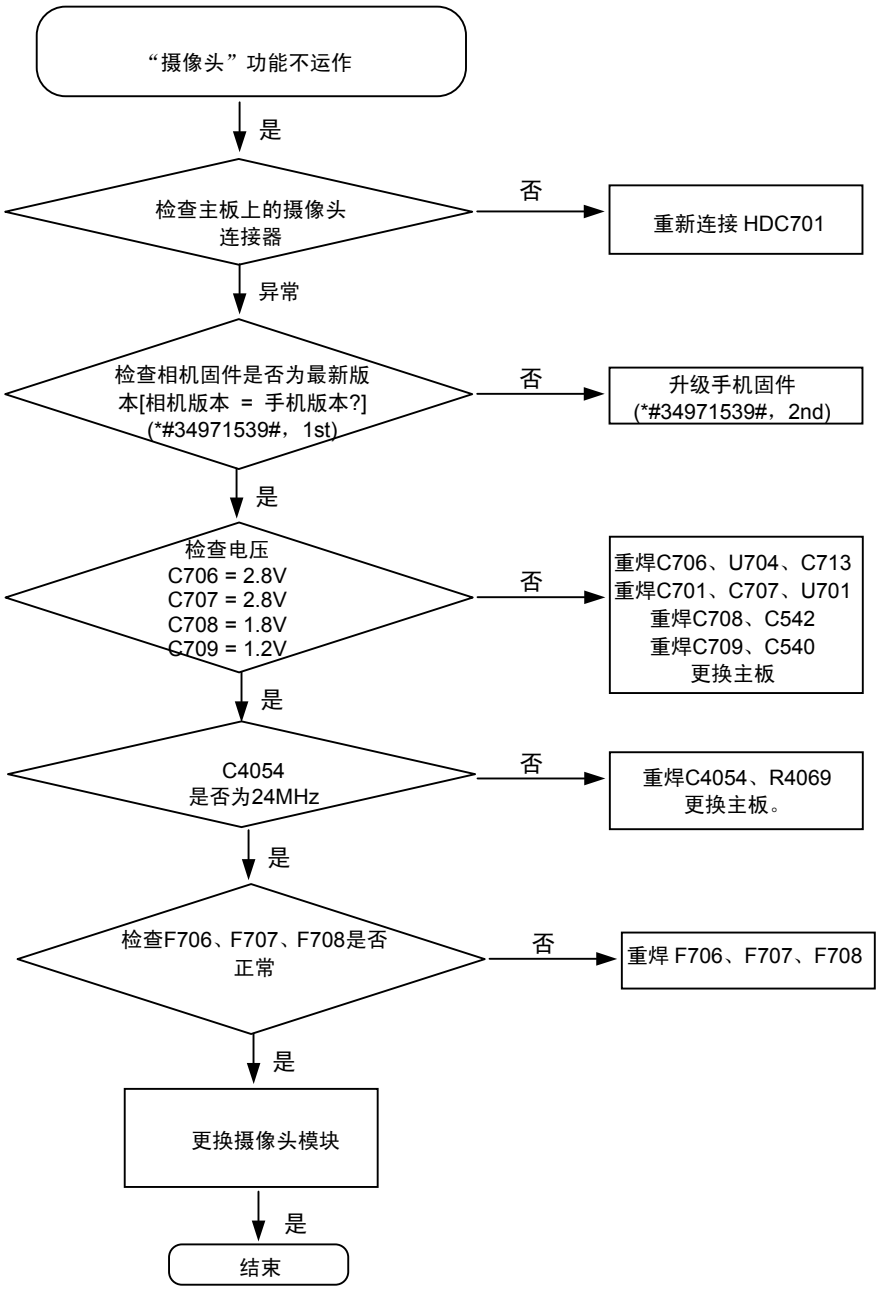

保密和所有权-本维修手册内容的变更恕不另行通知。
未经三星书面授权而发布，传送，或违背本文件中的任何内容或数据是严格禁止的。

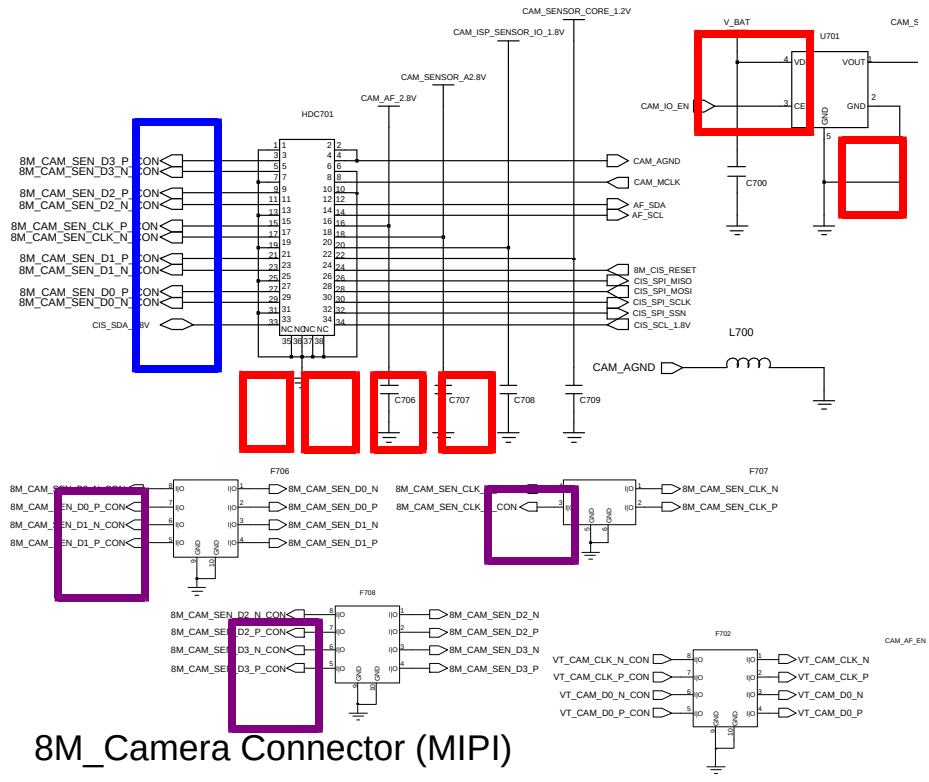

8M_Camera Connector (MIPI)

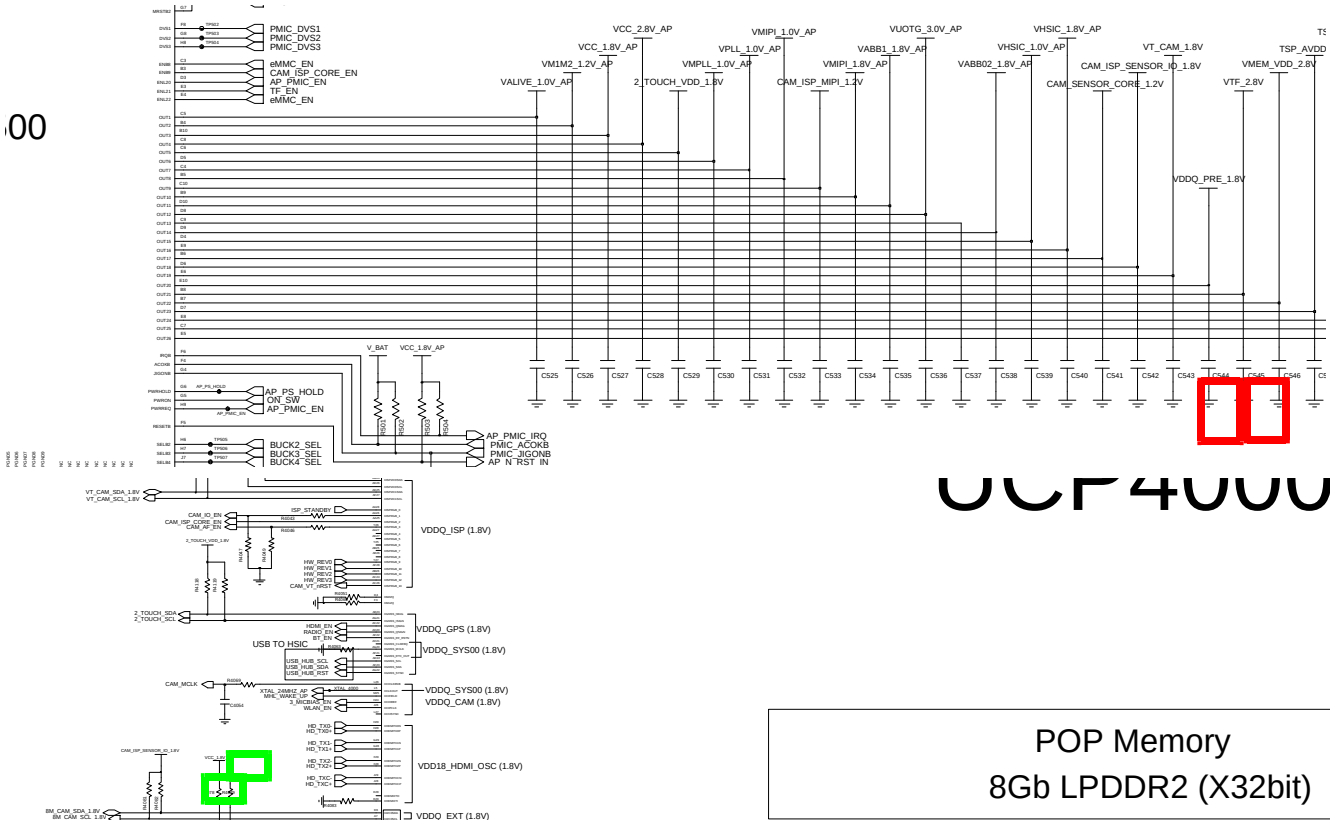

POP Memory
8Gb LPDDR2 (X32bit)

Confidential and proprietary-the contents in this service guide subject to change without prior notice.
Distribution, transmission, or infringement of any content or data from this document without Samsung's written authorization is strictly prohibited.

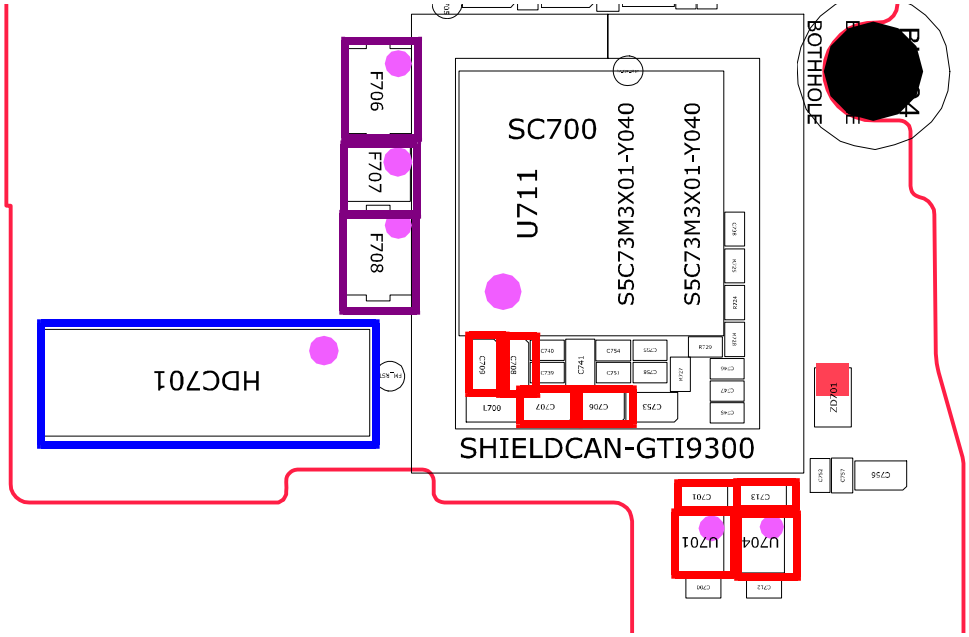

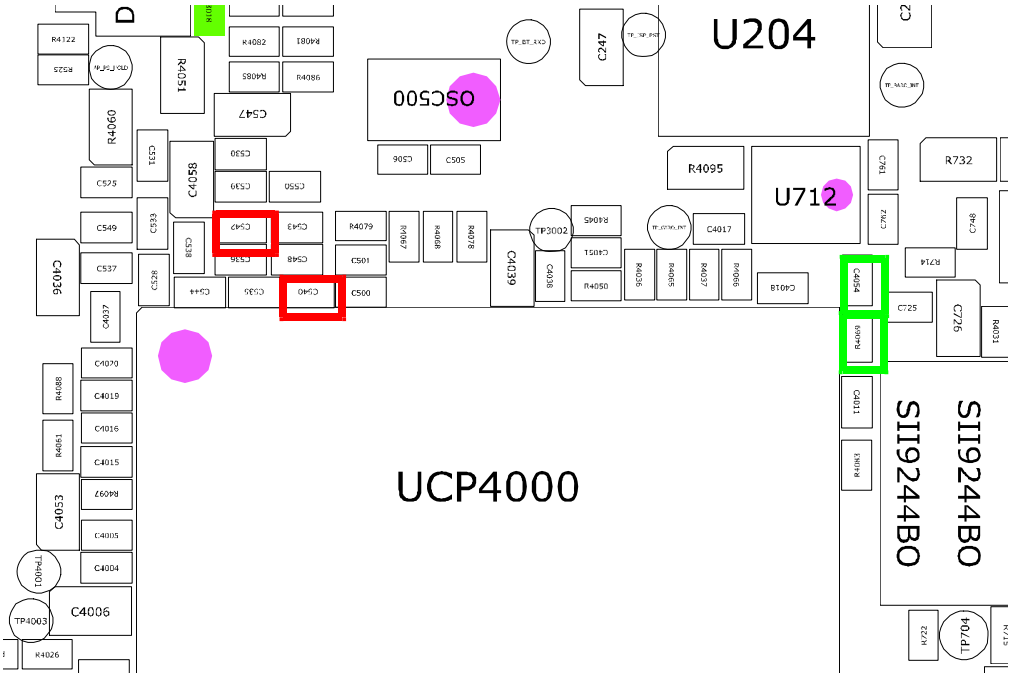

Confidential and proprietary-the contents in this service guide subject to change without prior notice.
Distribution, transmission, or infringement of any content or data from this document without Samsung's written authorization is strictly prohibited.

8-3-19. 1.9M 摄像头

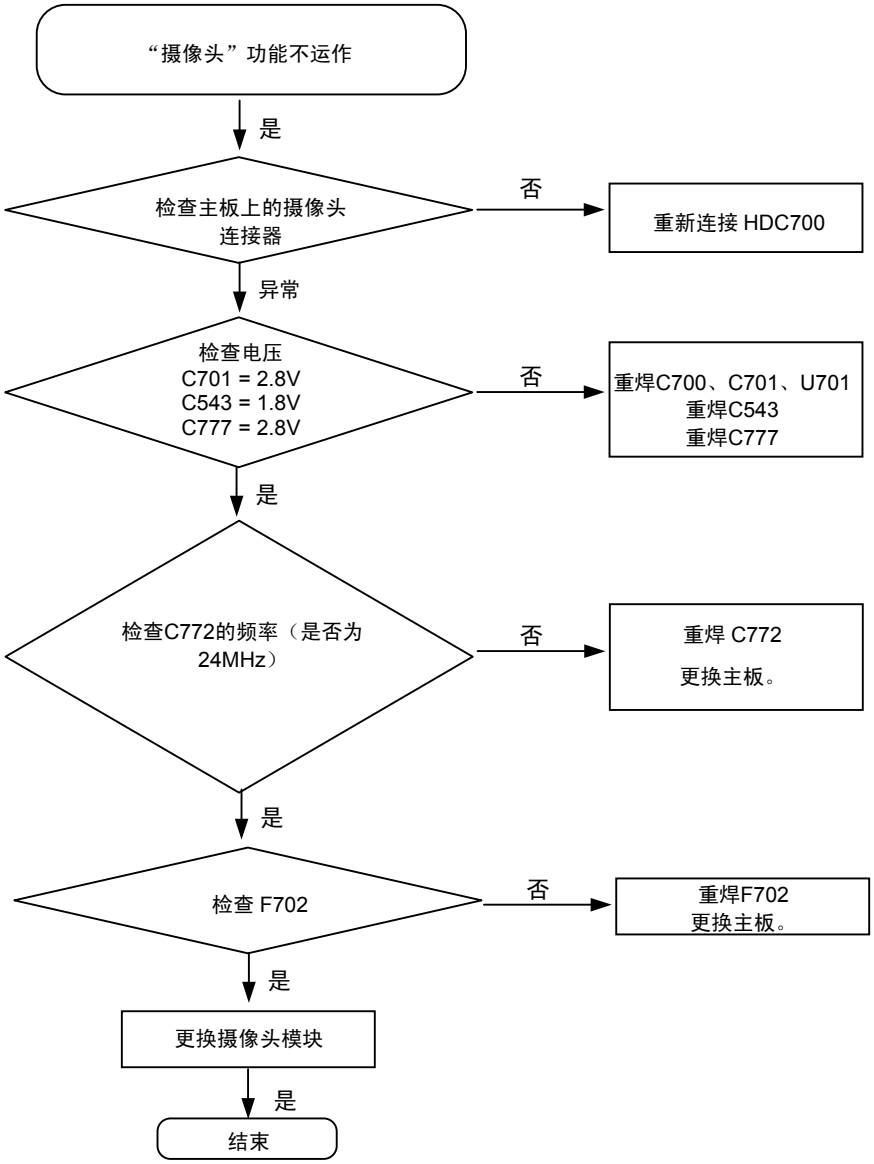

保密和所有权-本维修手册内容的变更恕不另行通知。
未经三星书面授权而发布，传送，或违背本文件中的任何内容或数据是严格禁止的。

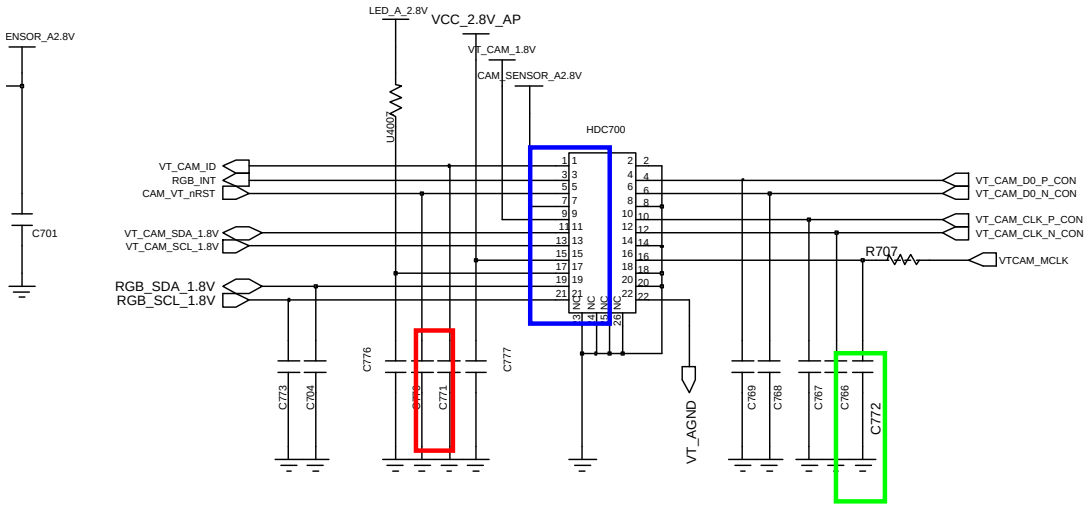

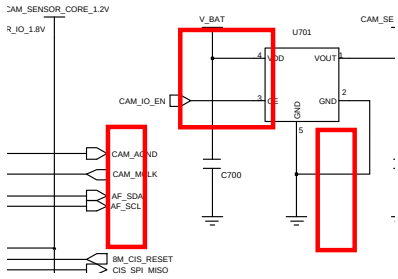

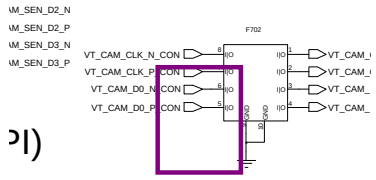

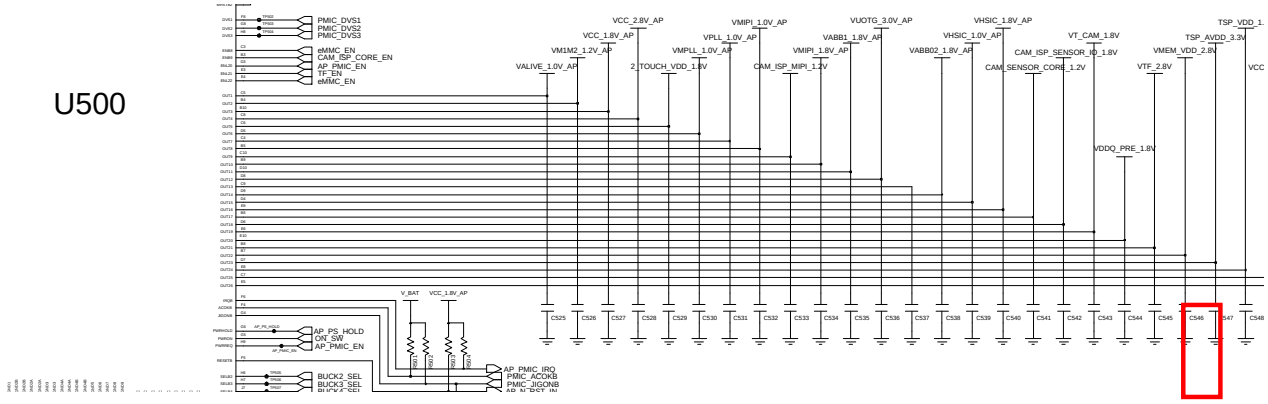

Confidential and proprietary-the contents in this service guide subject to change without prior notice.
Distribution, transmission, or infringement of any content or data from this document without Samsung's written authorization is strictly prohibited.

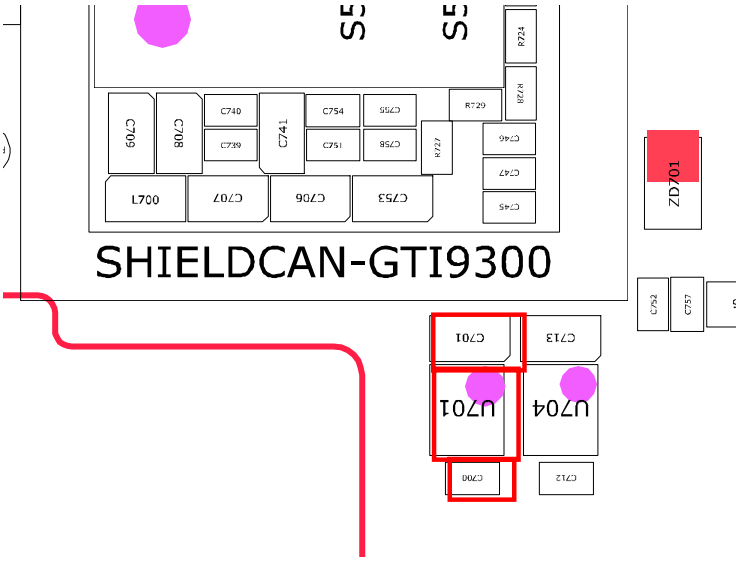
SHIELDCAN-GTI9300
ZD701
U704
U701
C701
C713
C700
C712
C709
C708
C740
C739
C741
C754
C751
C755
C758
R729
R727
R724
R728
C746
C747
C745
L700
C707
C706
C753
C752
C757

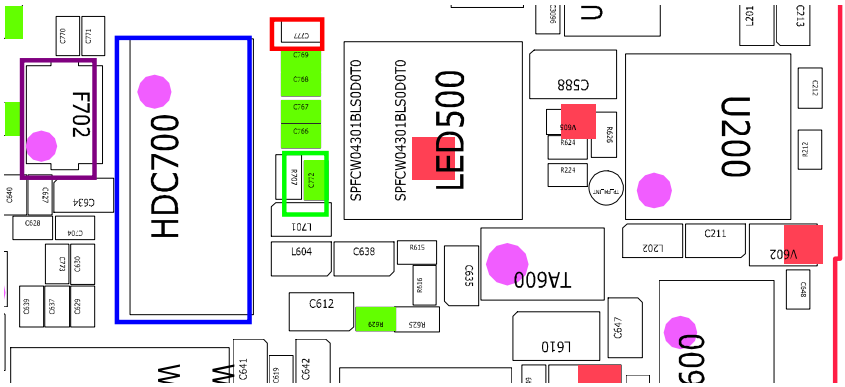
F702
HDC700
SPFCW043O1BLS0D0T0
SPFCW043O1BLS0D0T0
LED500
U200
C588
C213
C212
C211
V602
L202
L604
C638
L701
C612
TA600
L610
C647
C634
C627
C628
C629
C630
C639
C637
C640
C641
C642
C643
C648
C649
C650
C651
C652
C653
C654
C655
C656
C657
C658
C659
C660
C661
C662
C663
C664
C665
C666
C667
C668
C669
C670
C671
C672
C673
C674
C675
C676
C677
C678
C679
C680
C681
C682
C683
C684
C685
C686
C687
C688
C689
C690
C691
C692
C693
C694
C695
C696
C697
C698
C699
C700
C701
C702
C703
C704
C705
C706
C707
C708
C709
C710
C711
C712
C713
C714
C715
C716
C717
C718
C719
C720
C721
C722
C723
C724
C725
C726
C727
C728
C729
C730
C731
C732
C733
C734
C735
C736
C737
C738
C739
C740
C741
C742
C743
C744
C745
C746
C747
C748
C749
C750
C751
C752
C753
C754
C755
C756
C757
C758
R601
R602
R603
R604
R605
R606
R607
R608
R609
R610
R611
R612
R613
R614
R615
R616
R617
R618
R619
R620
R621
R622
R623
R624
R625
R626
R627
R628
R629
R630
R631
R632
R633
R634
R635
R636
R637
R638
R639
R640

8-3-21.GSM900 接收器

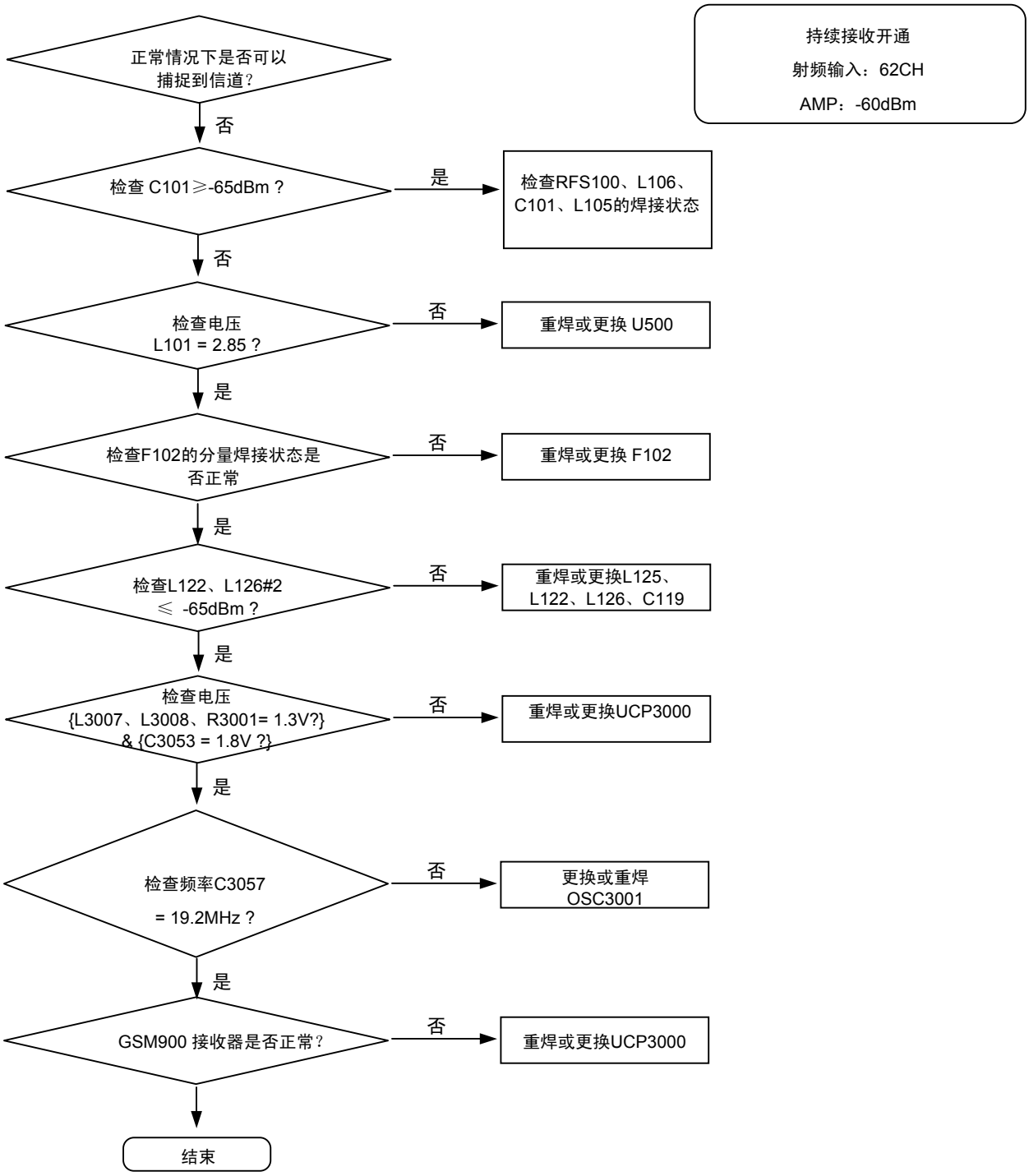

保密和所有权-本维修手册内容的变更恕不另行通知。
未经三星书面授权而发布，传送，或违背本文件中的任何内容或数据是严格禁止的。

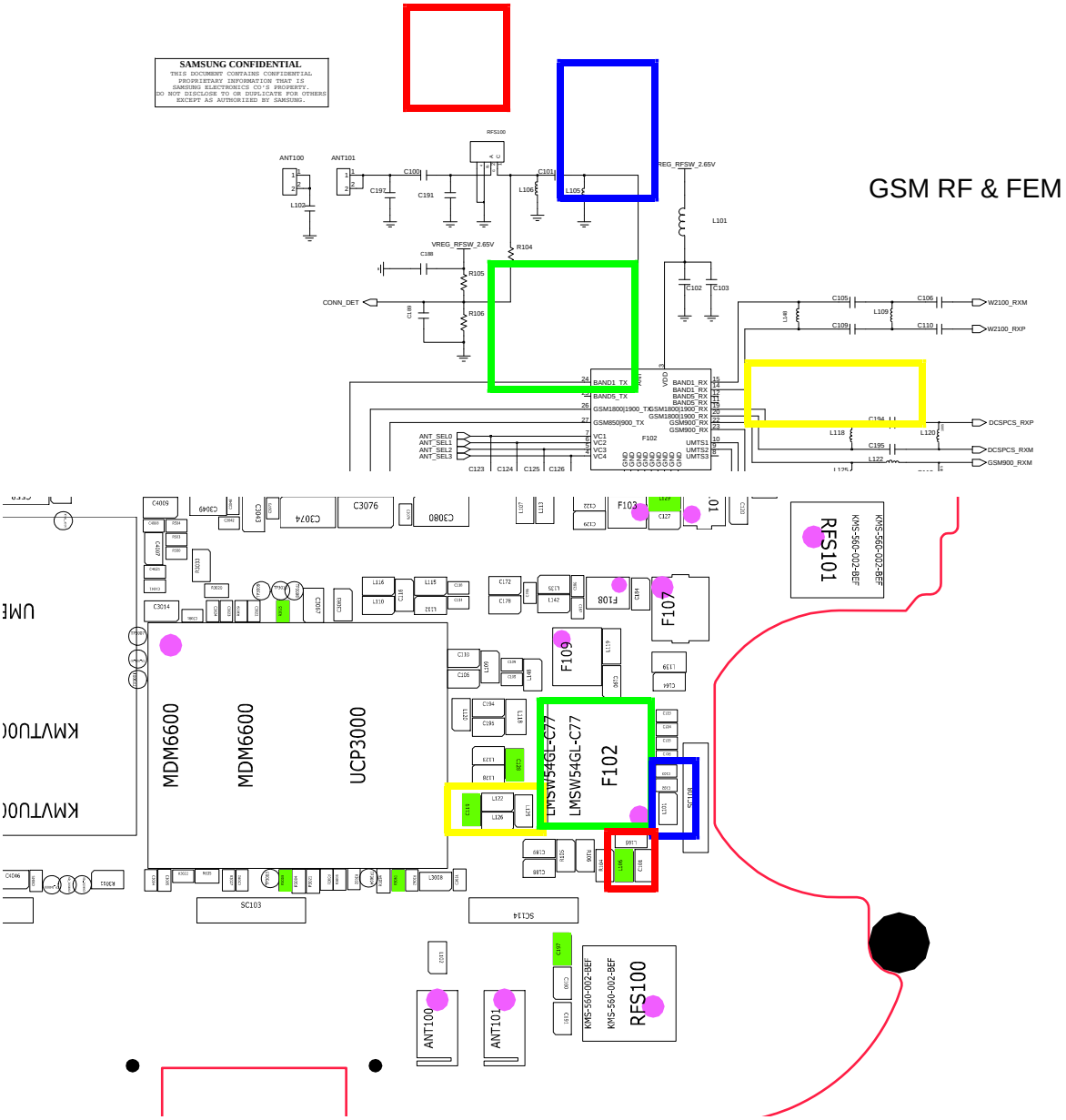

Confidential and proprietary-the contents in this service guide subject to change without prior notice.
Distribution, transmission, or infringement of any content or data from this document without Samsung's written authorization is strictly prohibited.

8-3-22.DCS1800/PCS1900 接收器

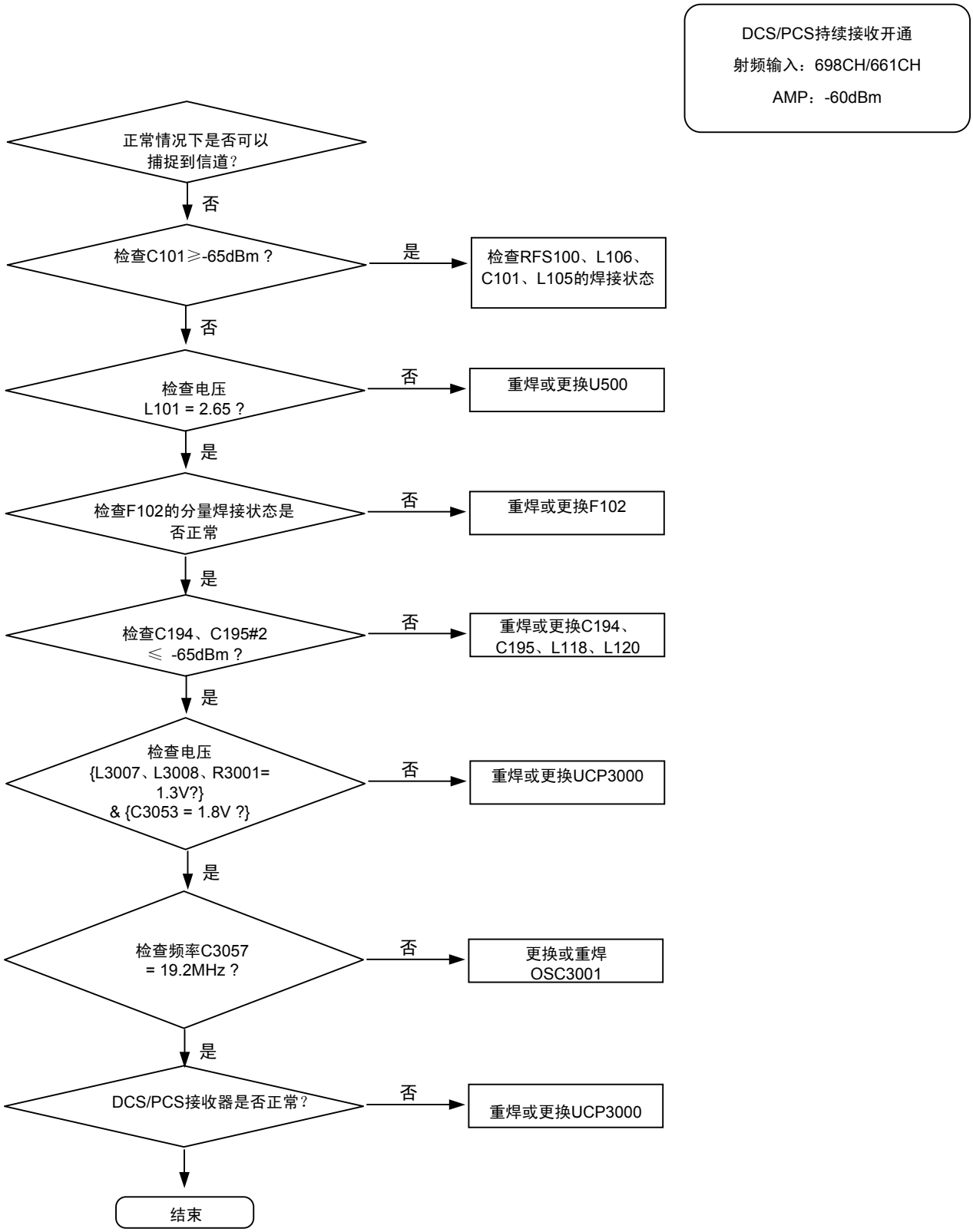

保密和所有权-本维修手册内容的变更恕不另行通知。
未经三星书面授权而发布，传送，或违背本文件中的任何内容或数据是严格禁止的。

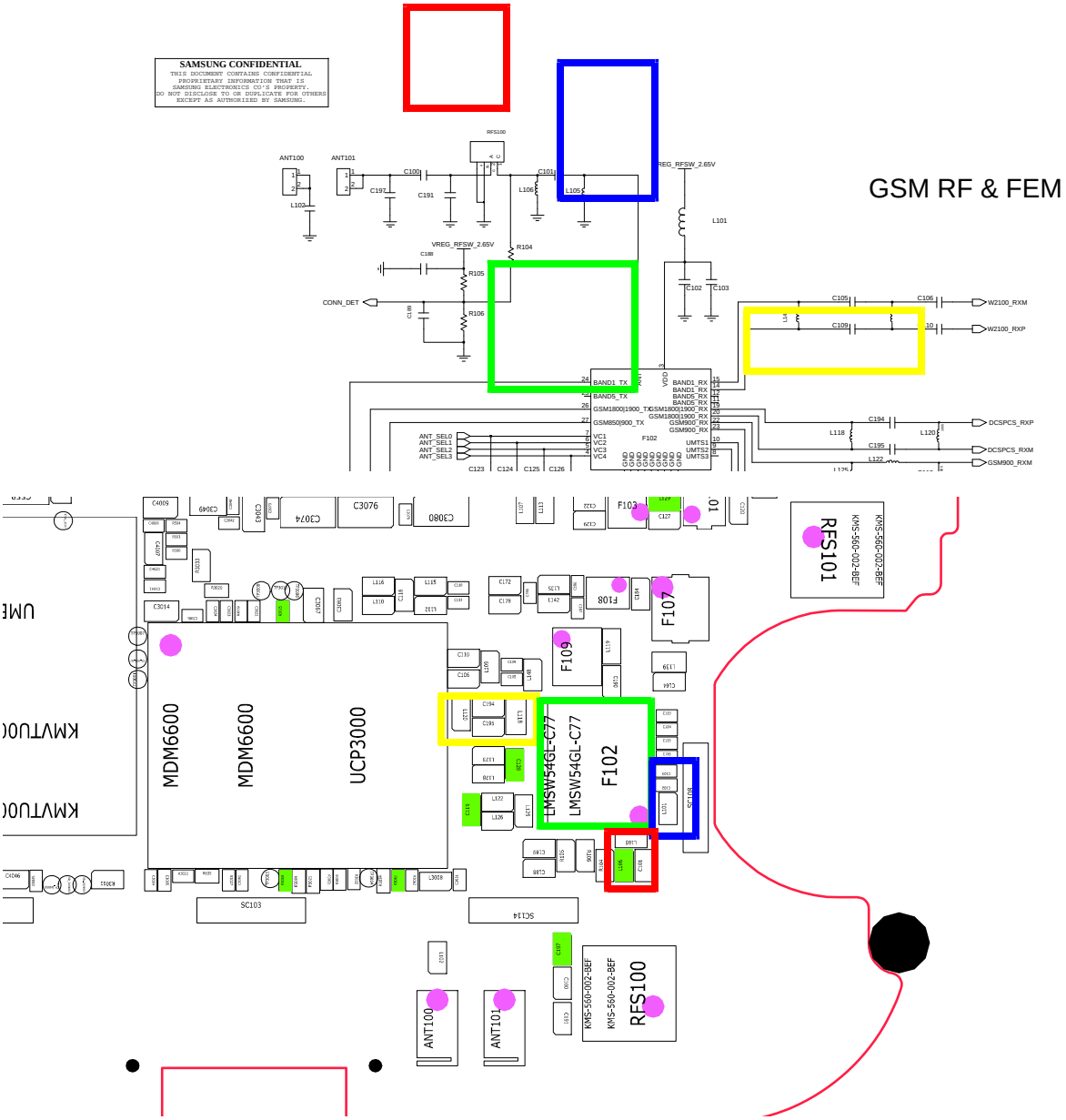

Confidential and proprietary-the contents in this service guide subject to change without prior notice.
Distribution, transmission, or infringement of any content or data from this document without Samsung's written authorization is strictly prohibited.

8-3-23. WCDMA Band1 接收器

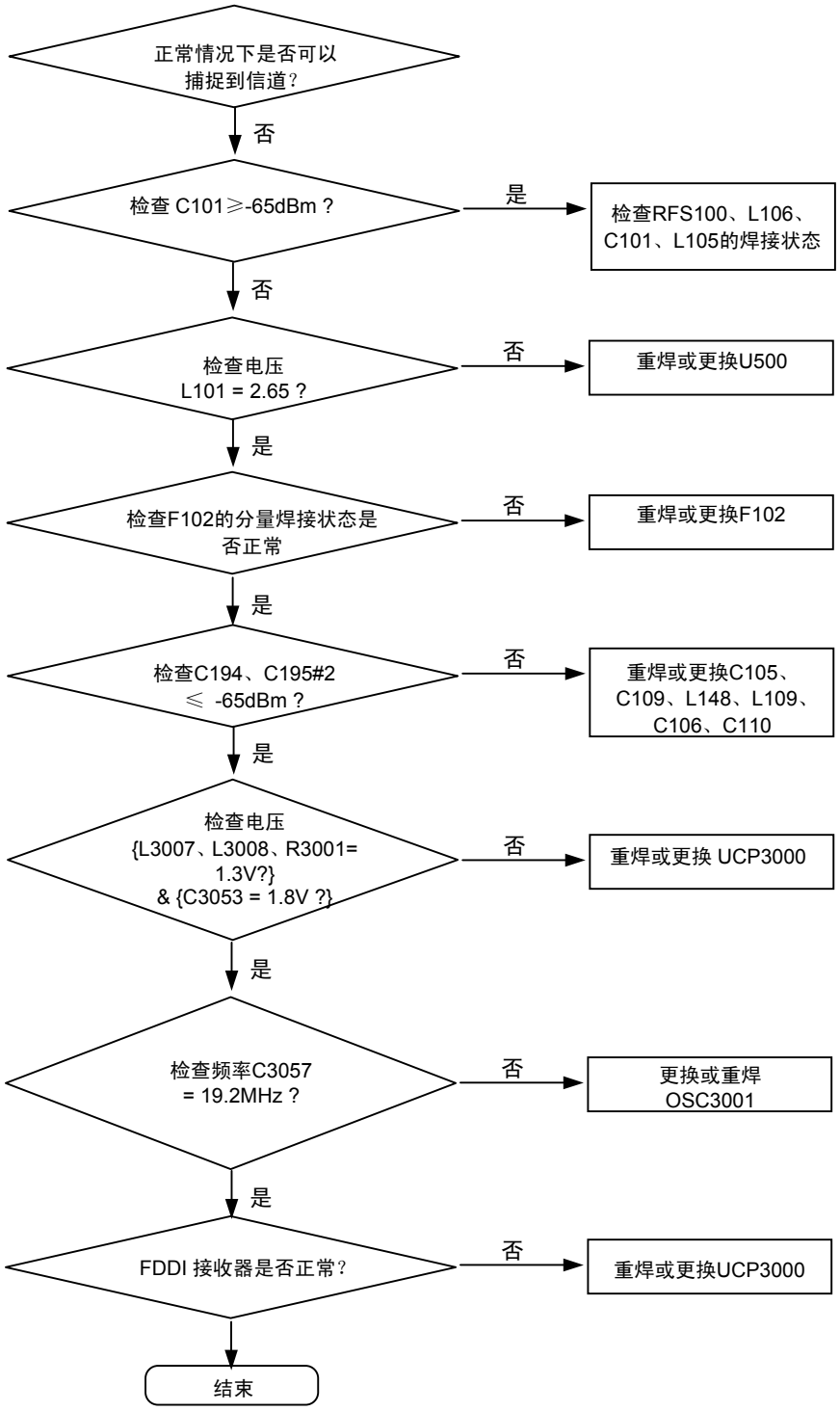

保密和所有权-本维修手册内容的变更恕不另行通知。
未经三星书面授权而发布，传送，或违背本文件中的任何内容或数据是严格禁止的。

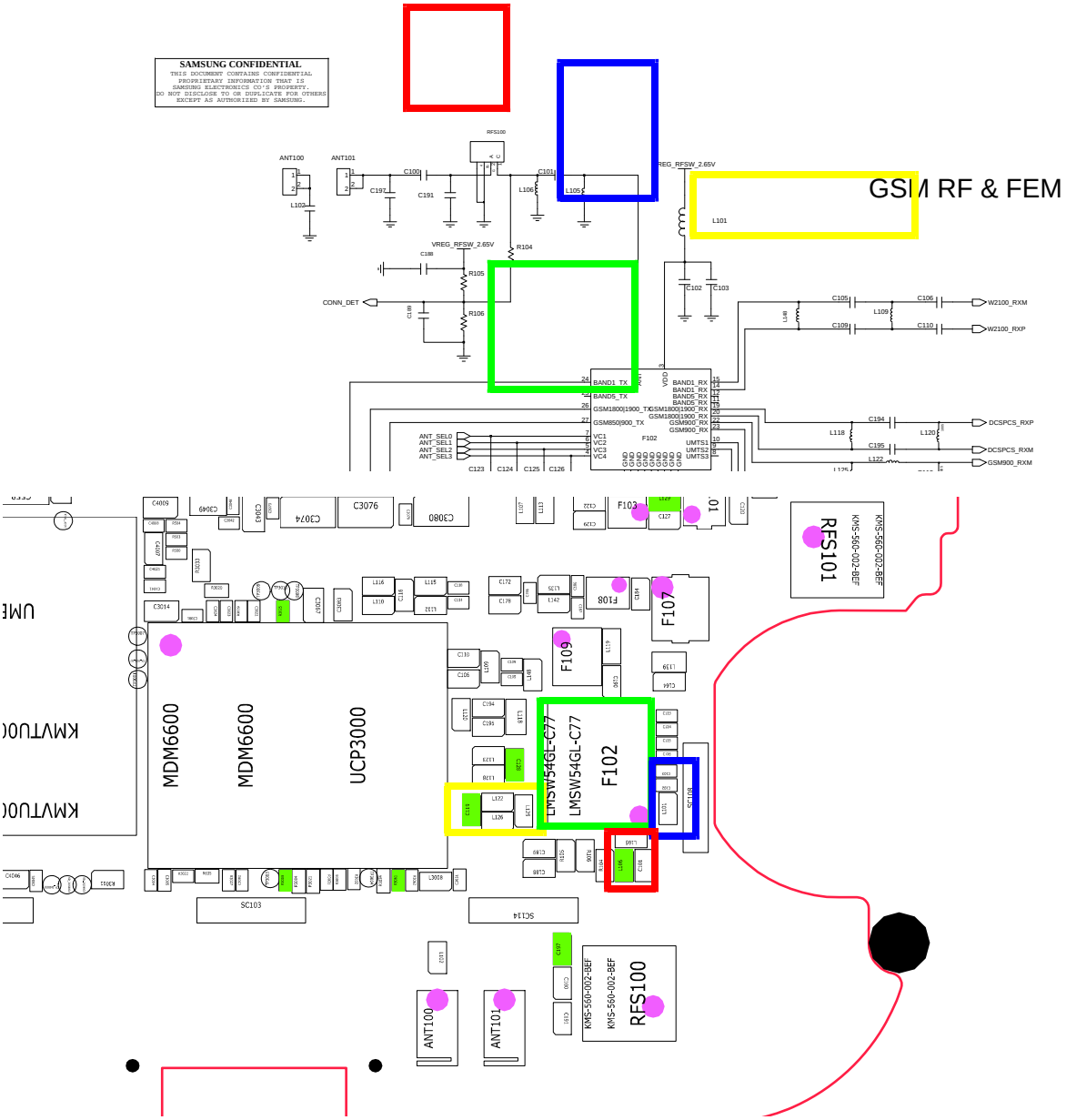

Confidential and proprietary-the contents in this service guide subject to change without prior notice.
Distribution, transmission, or infringement of any content or data from this document without Samsung's written authorization is strictly prohibited.

8-3-24.GSM900 发射器

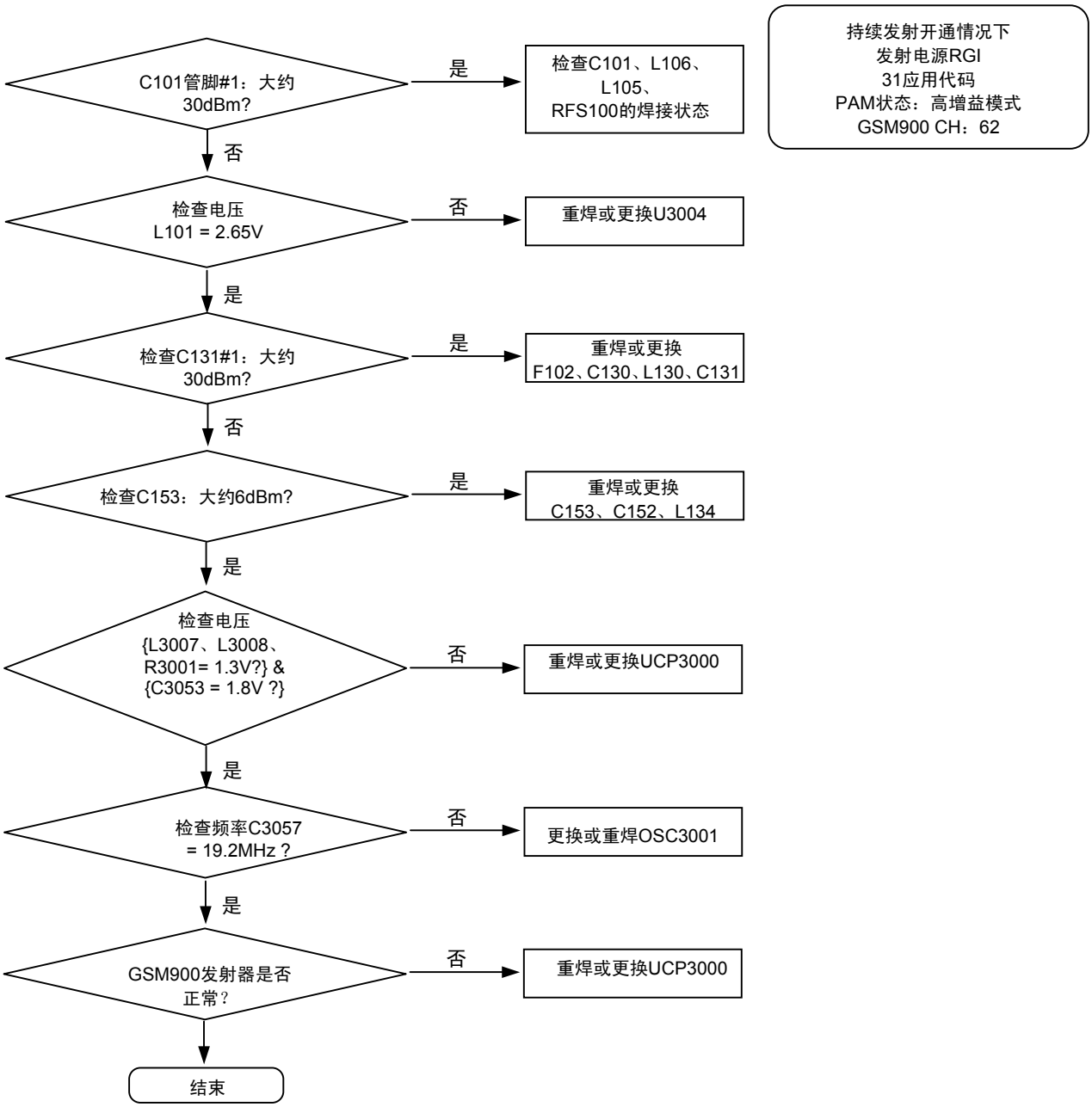

保密和所有权-本维修手册内容的变更恕不另行通知。
未经三星书面授权而发布，传送，或违背本文件中的任何内容或数据是严格禁止的。

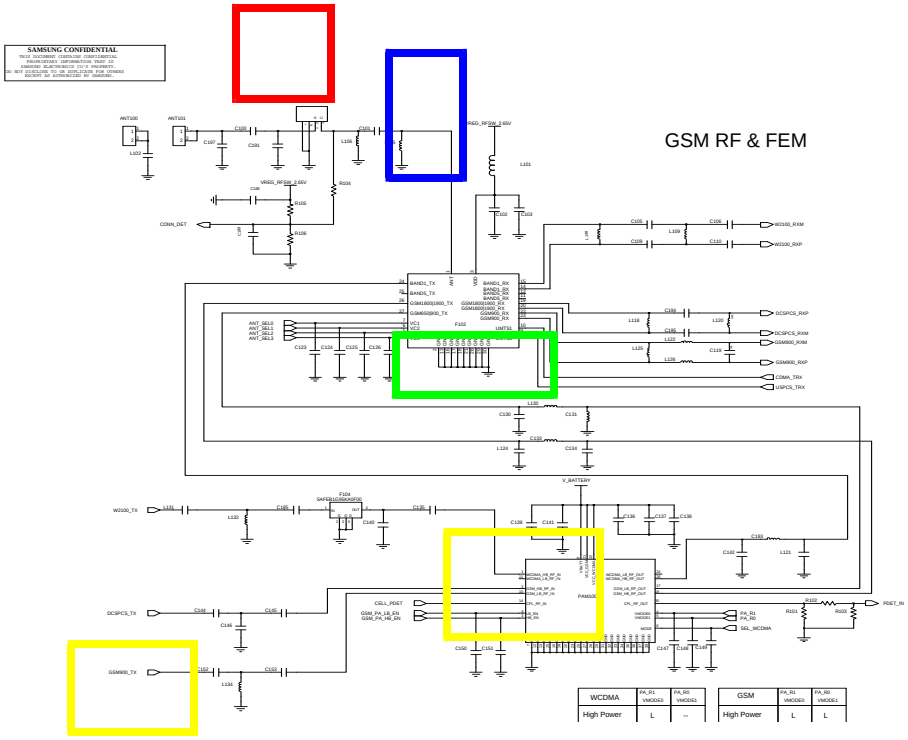

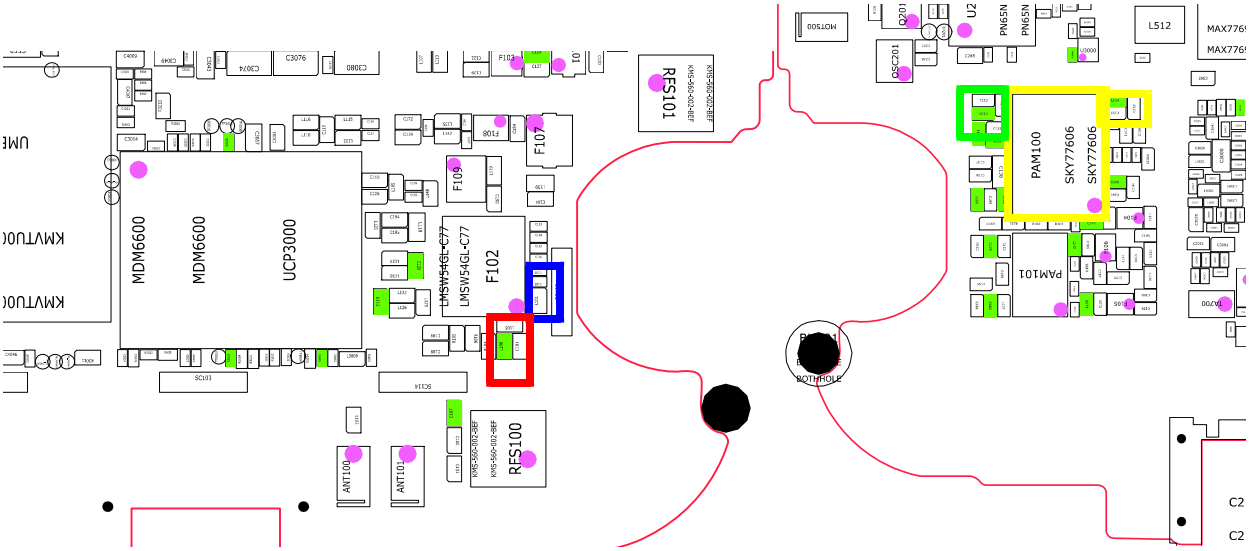

Confidential and proprietary-the contents in this service guide subject to change without prior notice.
Distribution, transmission, or infringement of any content or data from this document without Samsung's written authorization is strictly prohibited.

8-3-25.DCS1800/PCS1900 发射器

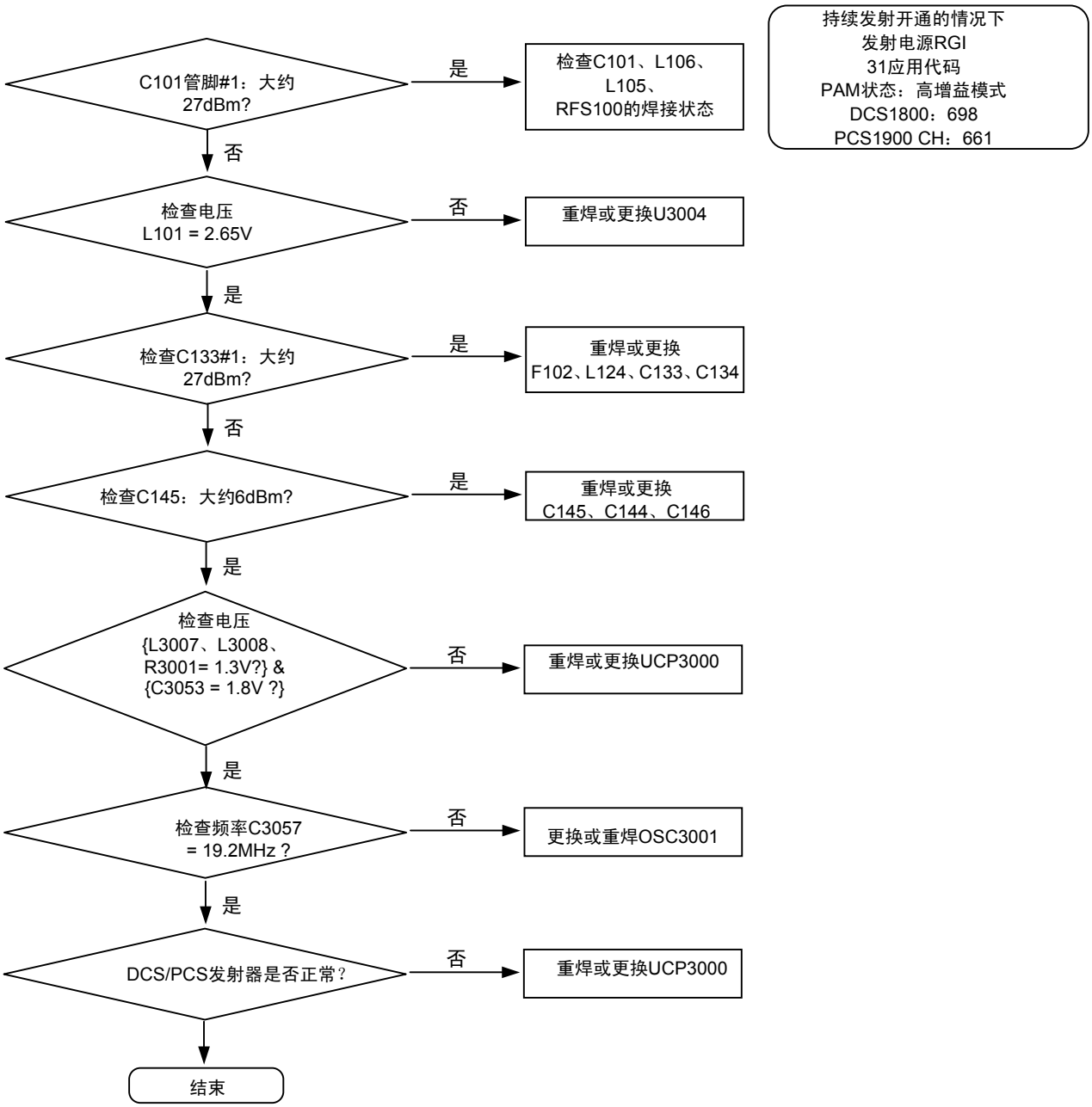

保密和所有权-本维修手册内容的变更恕不另行通知。
未经三星书面授权而发布，传送，或违背本文件中的任何内容或数据是严格禁止的。

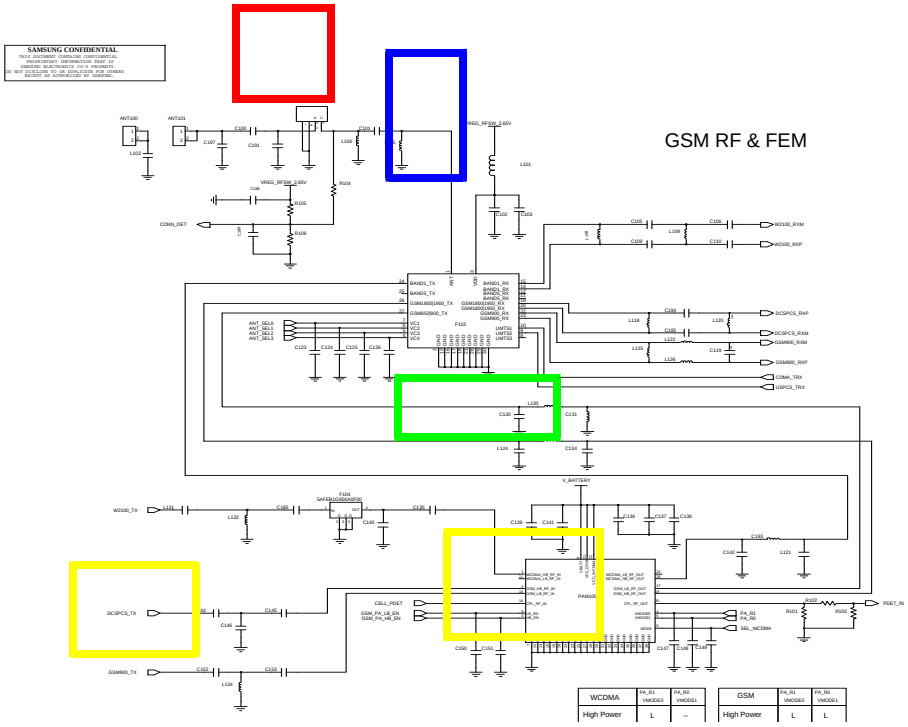

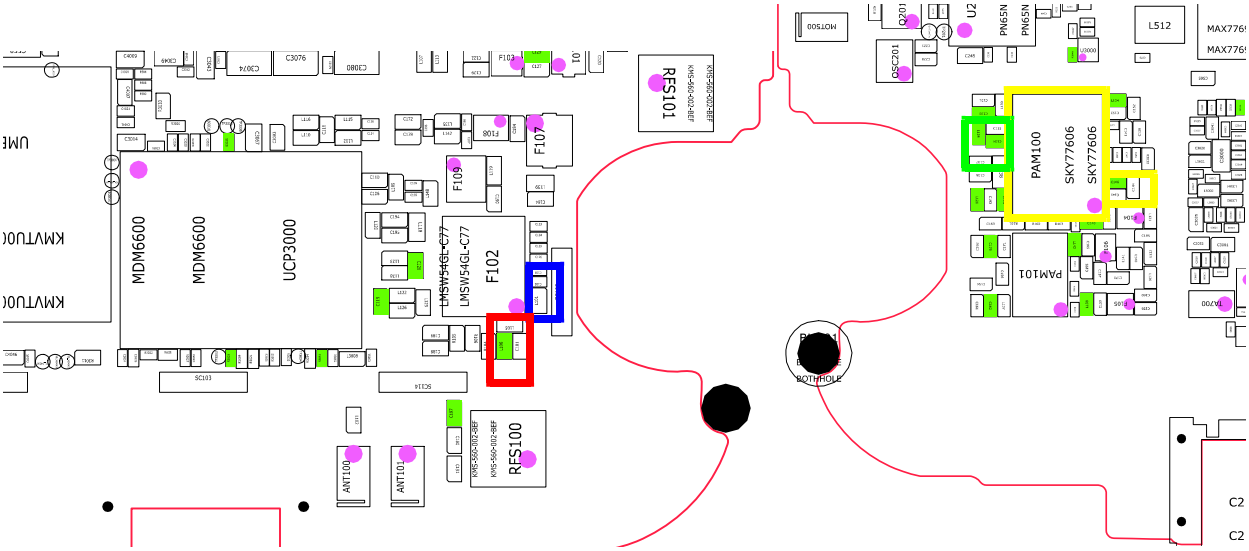

Confidential and proprietary-the contents in this service guide subject to change without prior notice.
Distribution, transmission, or infringement of any content or data from this document without Samsung's written authorization is strictly prohibited.

8-3-26.WCDMA2100 发射器

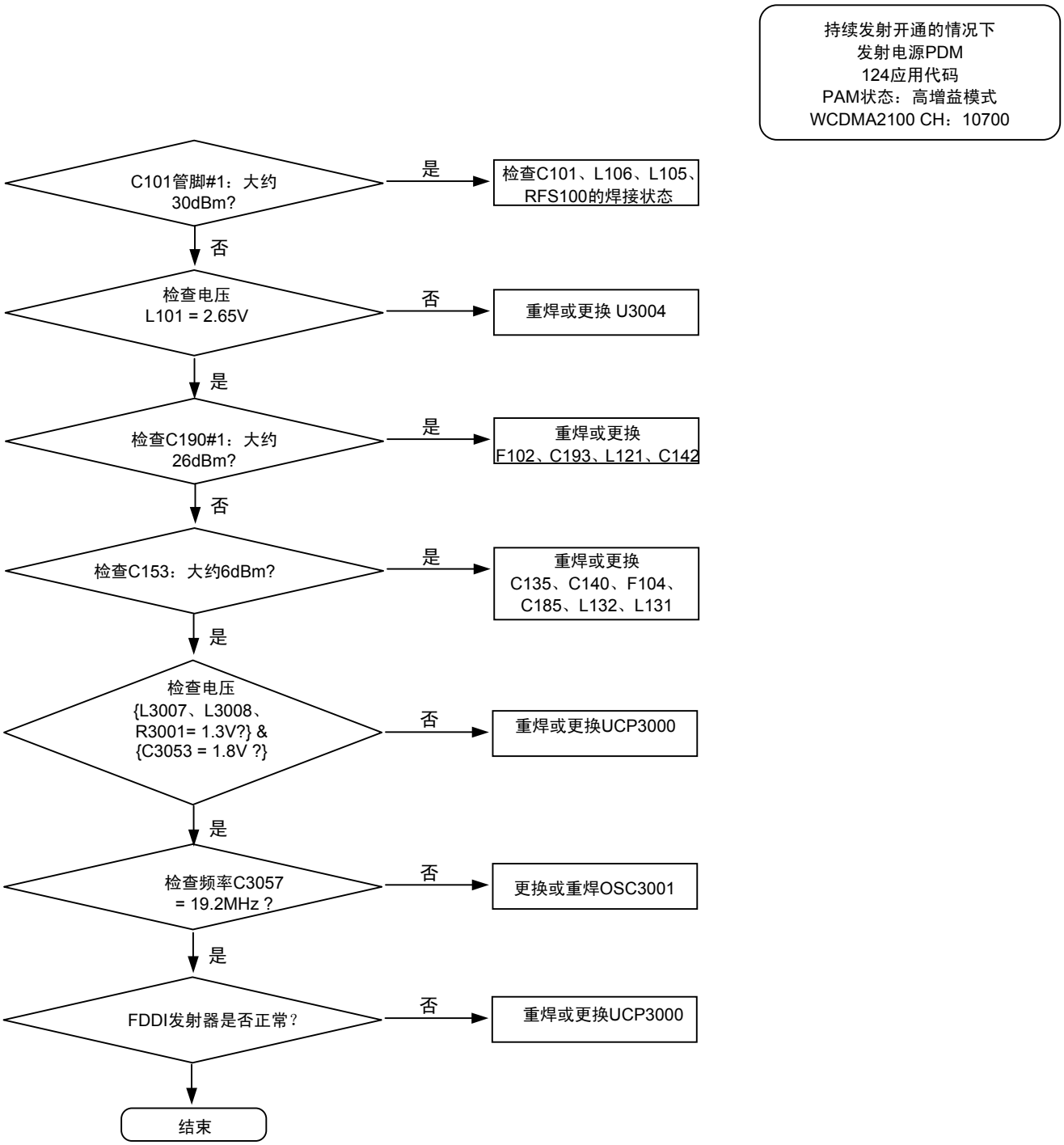

保密和所有权-本维修手册内容的变更恕不另行通知。
未经三星书面授权而发布，传送，或违背本文件中的任何内容或数据是严格禁止的。

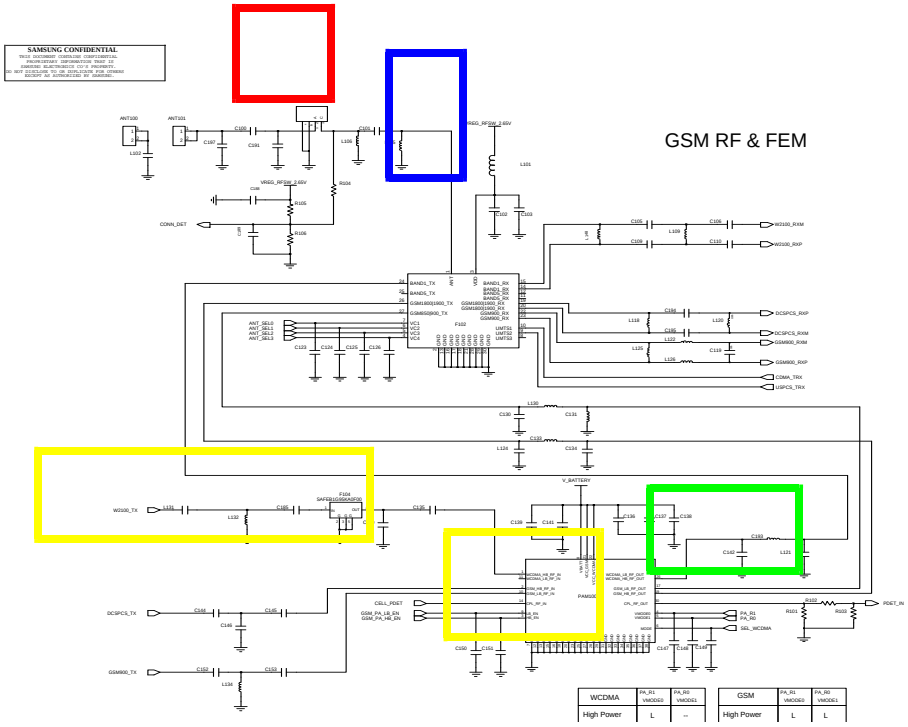

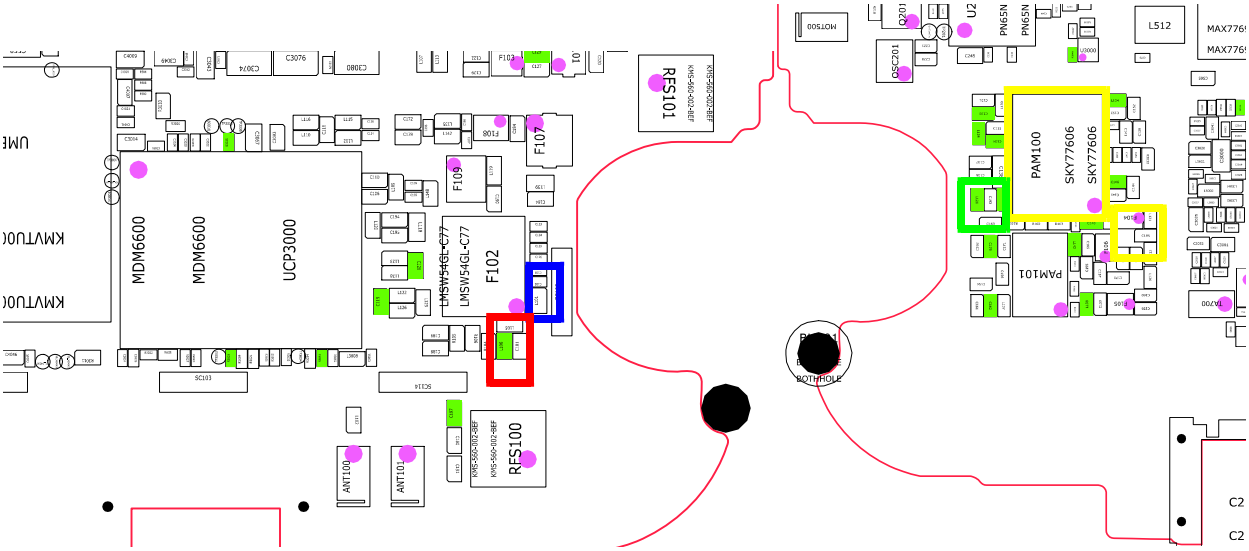

Confidential and proprietary-the contents in this service guide subject to change without prior notice.
Distribution, transmission, or infringement of any content or data from this document without Samsung's written authorization is strictly prohibited.

8-3-26.MHL

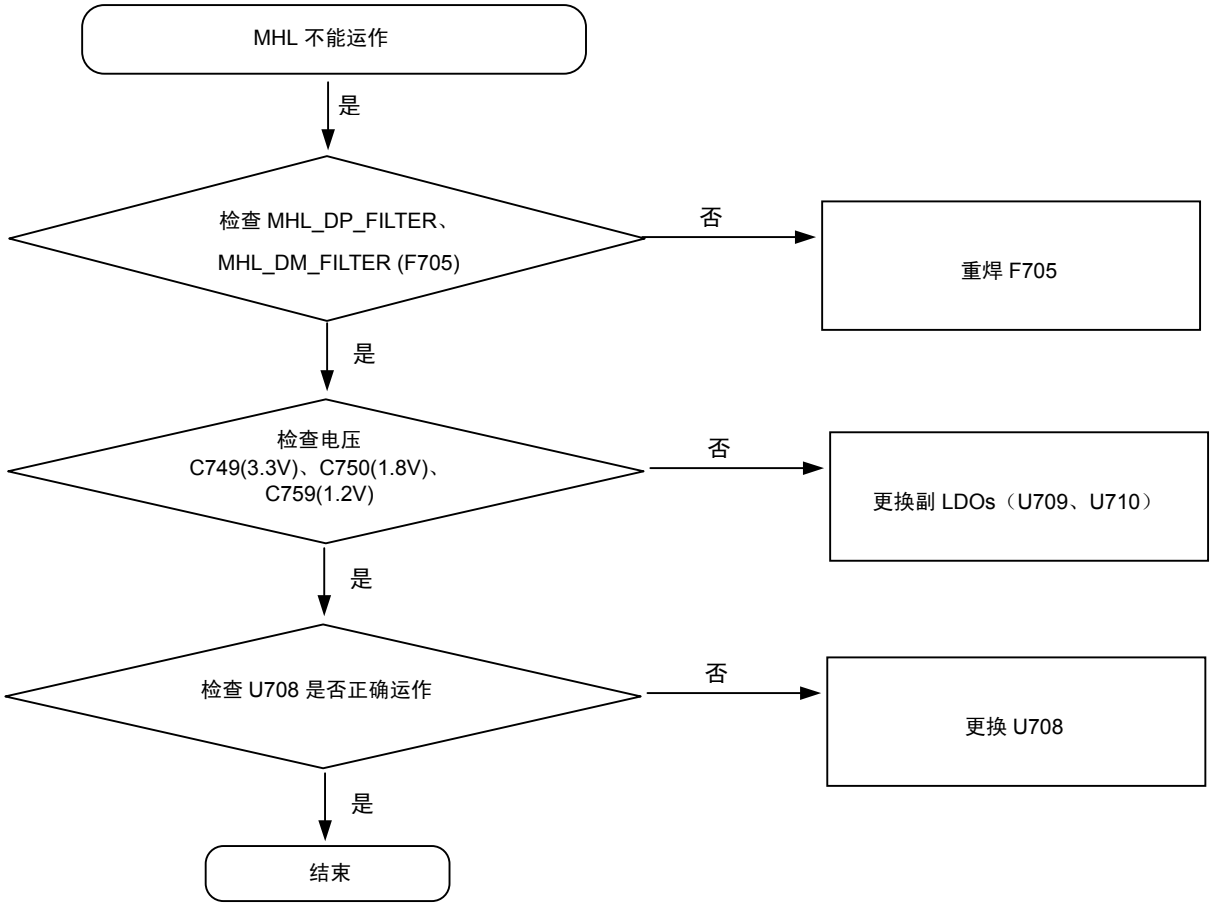

保密和所有权-本维修手册内容的变更恕不另行通知。
未经三星书面授权而发布，传送，或违背本文件中的任何内容或数据是严格禁止的。

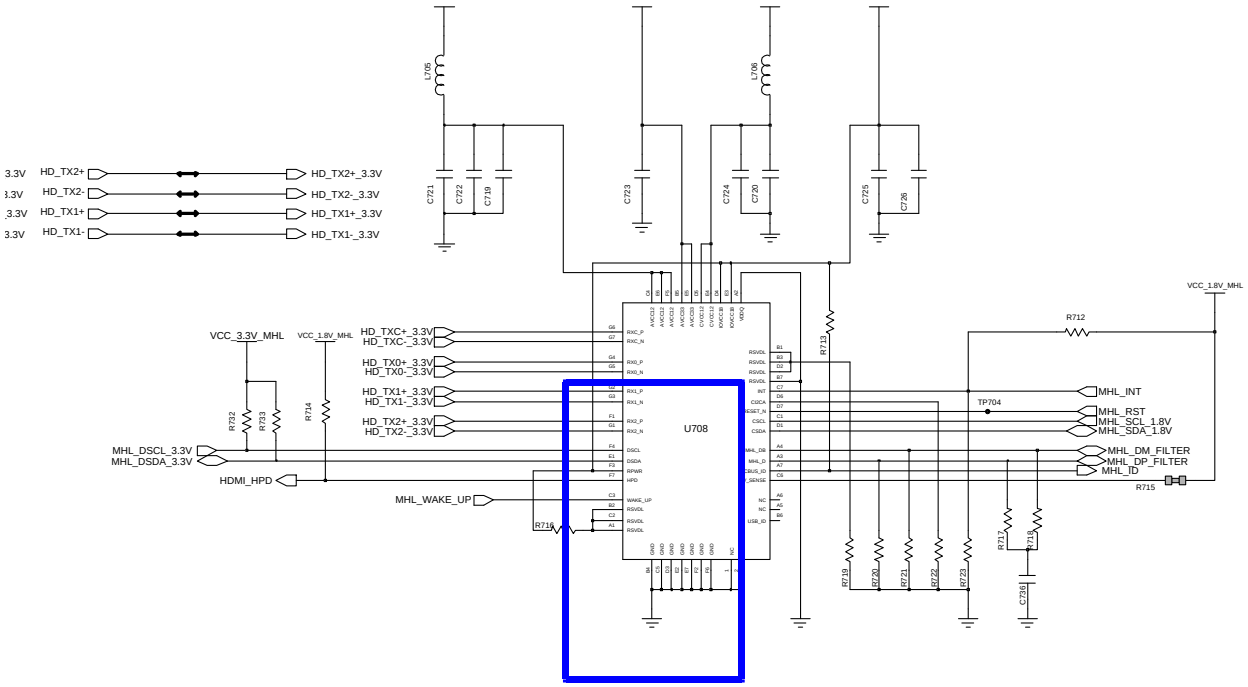

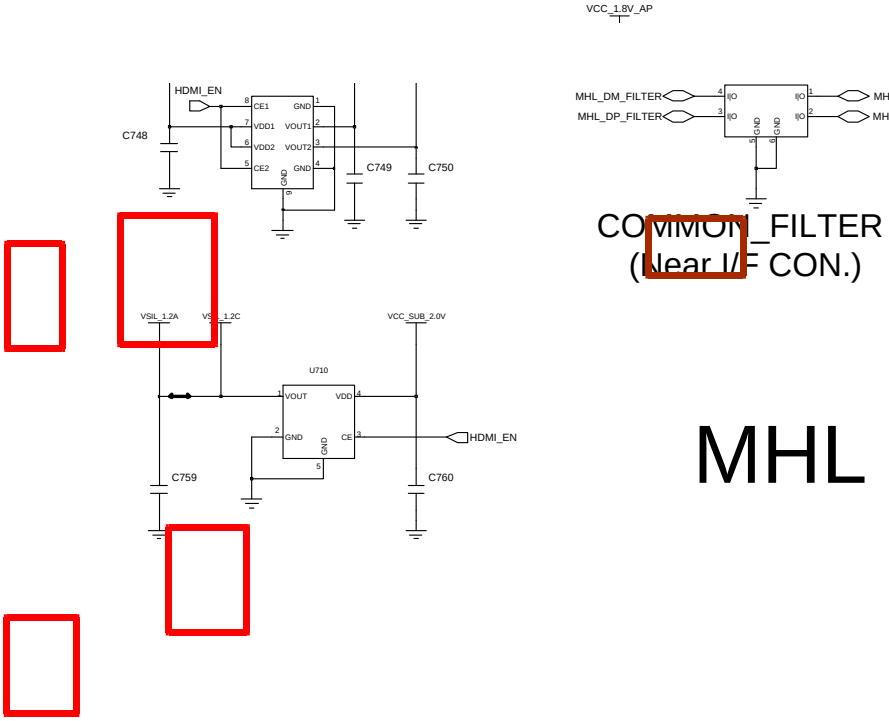

MHL PAF

Confidential and proprietary-the contents in this service guide subject to change without prior notice.
Distribution, transmission, or infringement of any content or data from this document without Samsung's written authorization is strictly prohibited.

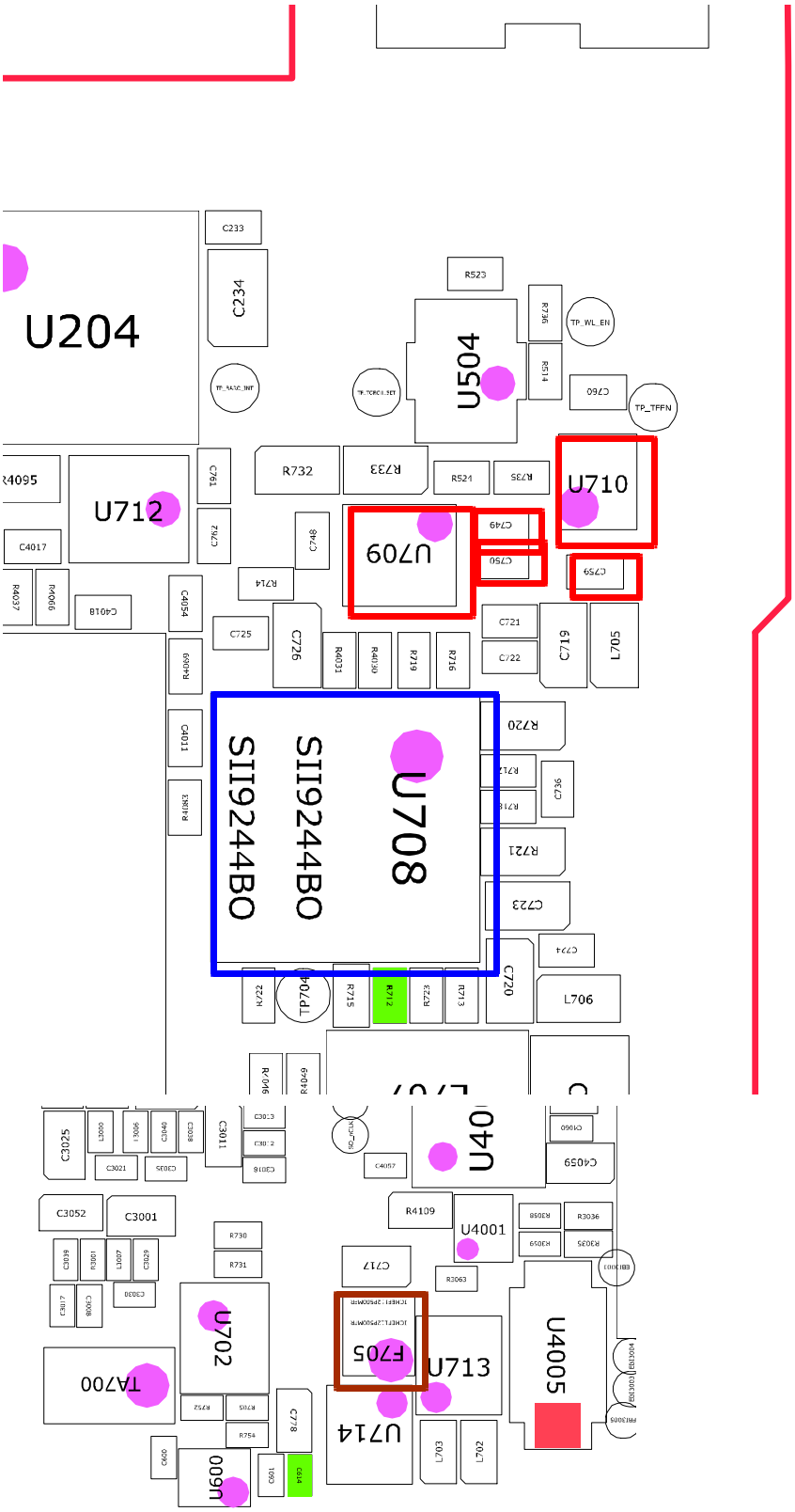

Confidential and proprietary-the contents in this service guide subject to change without prior notice.
Distribution, transmission, or infringement of any content or data from this document without Samsung's written authorization is strictly prohibited.

8-3-27.OTG

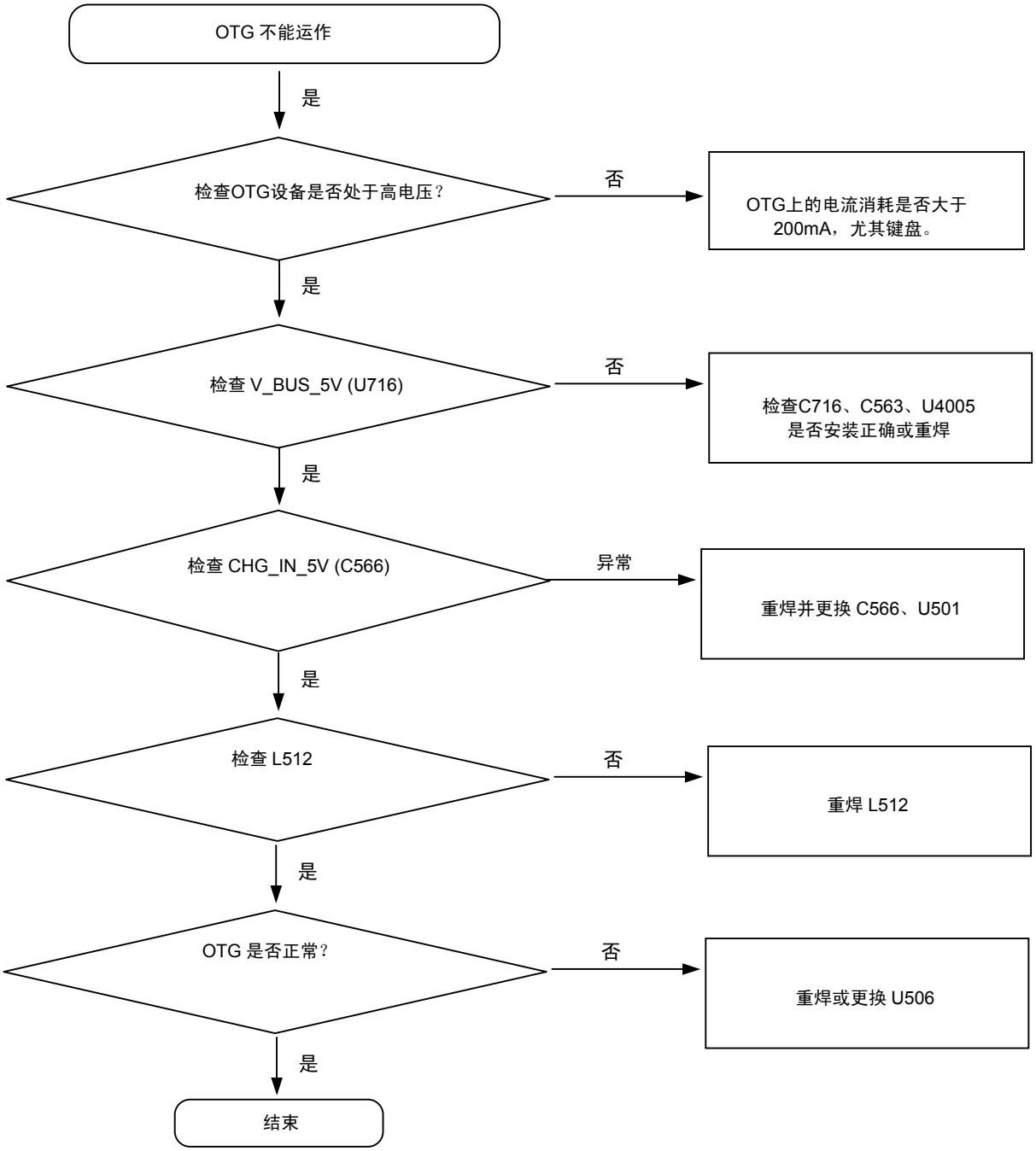

保密和所有权-本维修手册内容的变更恕不另行通知。
未经三星书面授权而发布，传送，或违背本文件中的任何内容或数据是严格禁止的。

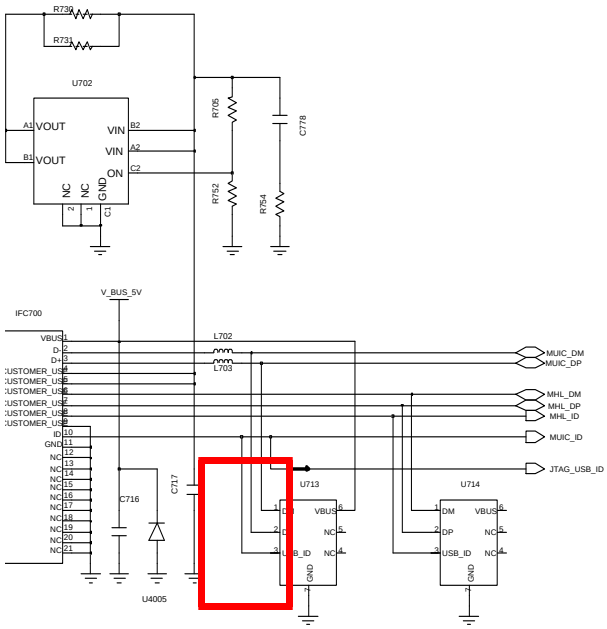

11PIN USB CONNECTOR

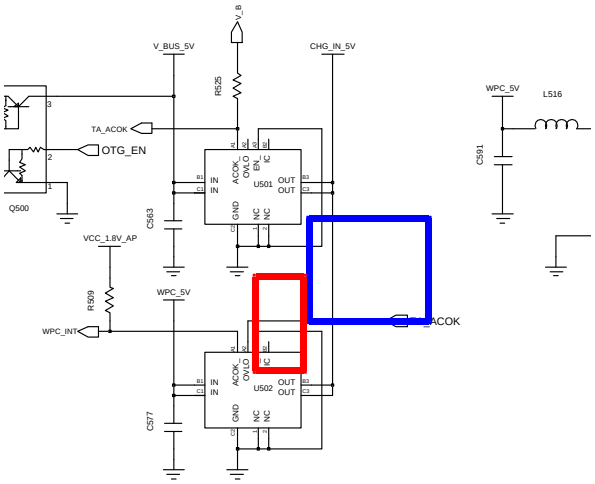

WIRELESS CHARGING SWITCH

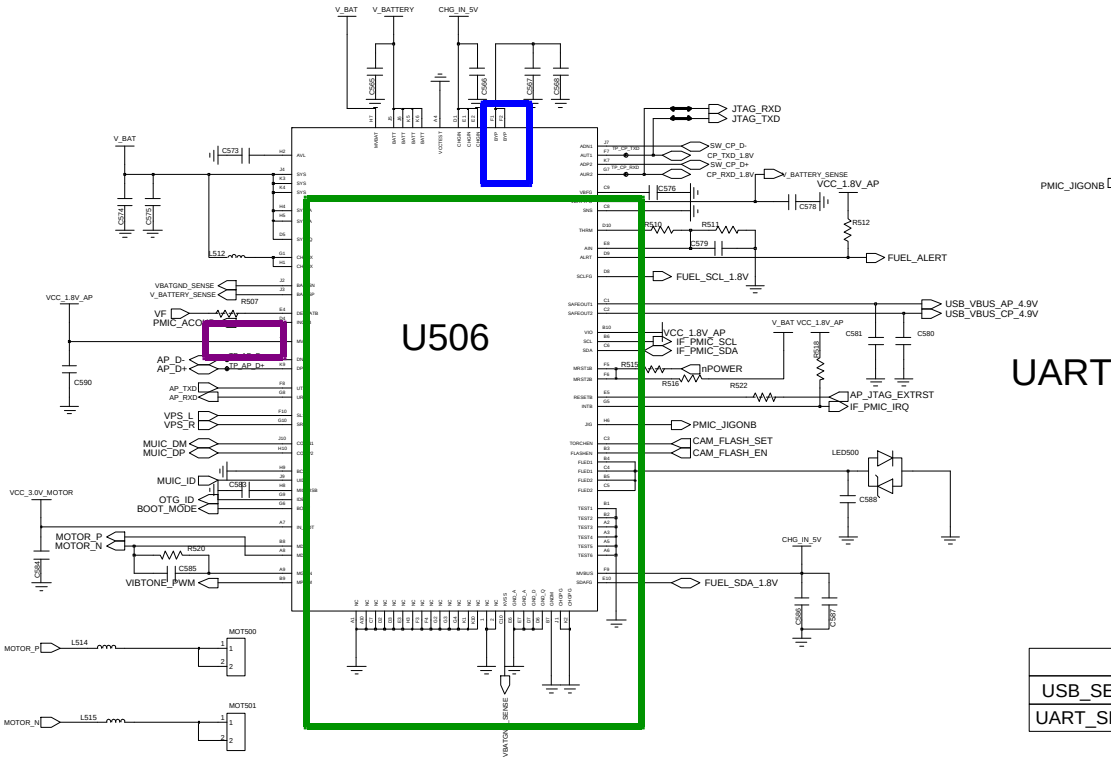

Confidential and proprietary-the contents in this service guide subject to change without prior notice.
Distribution, transmission, or infringement of any content or data from this document without Samsung's written authorization is strictly prohibited.

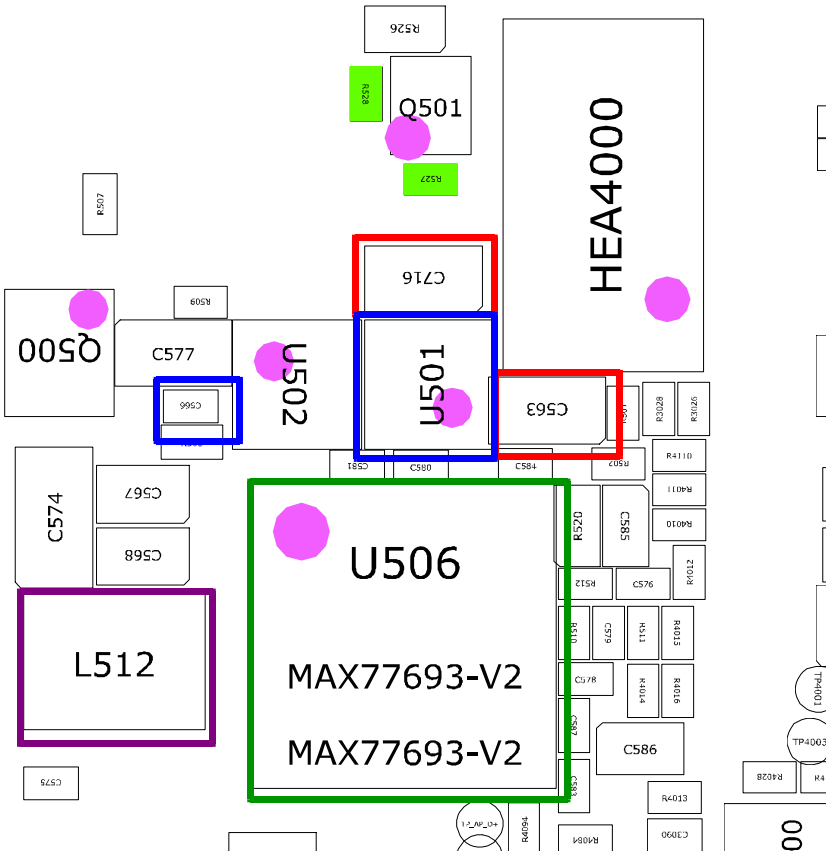

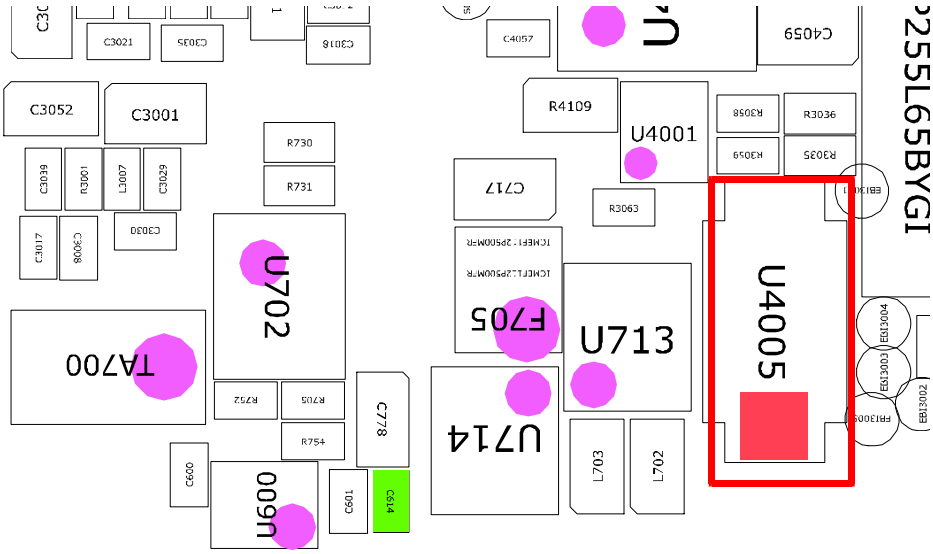

Confidential and proprietary-the contents in this service guide subject to change without prior notice.
Distribution, transmission, or infringement of any content or data from this document without Samsung's written authorization is strictly prohibited.

8-4.维修原理图

-故障处（顶部视图）

- ：故障

UCP4000

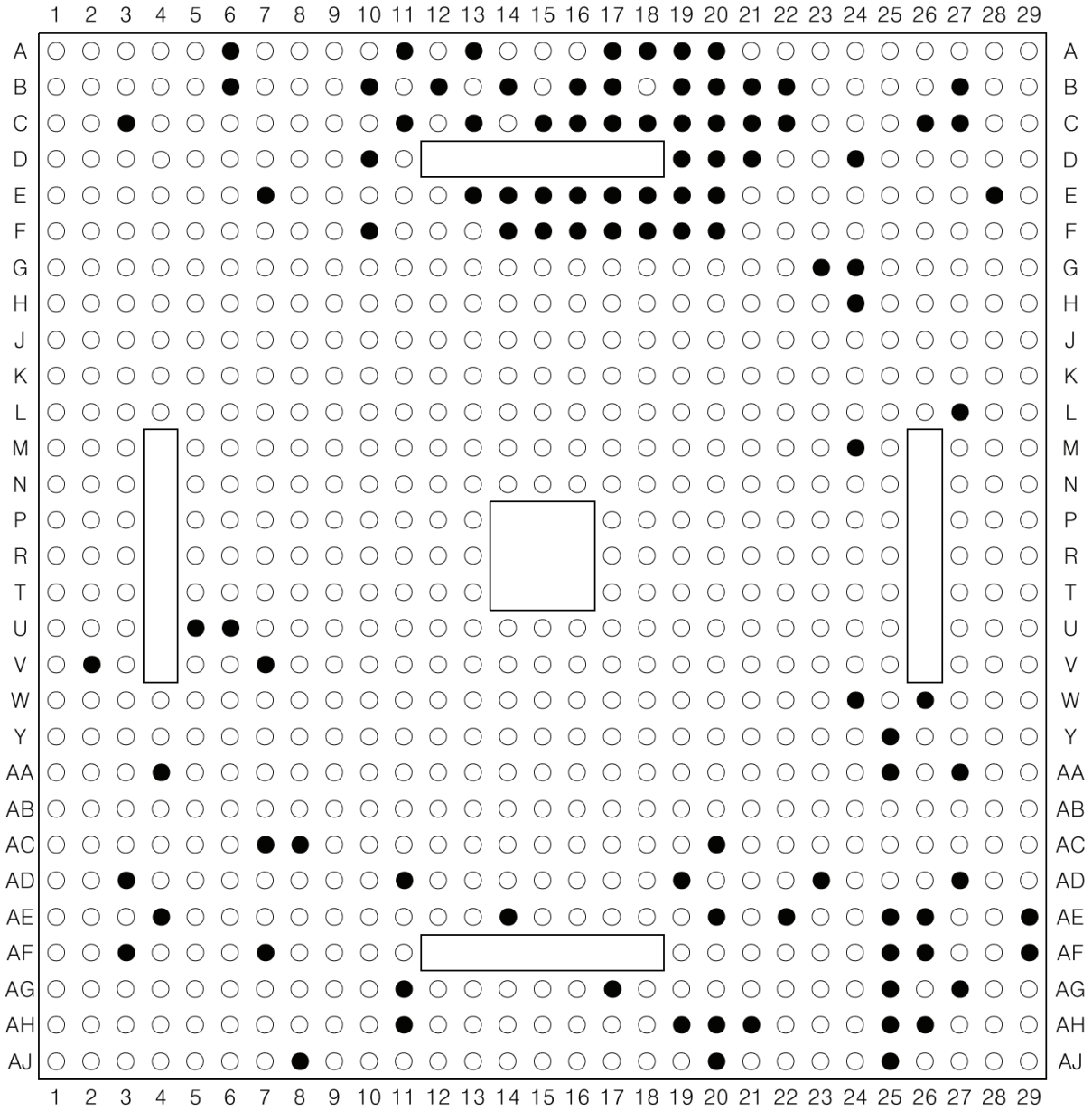

保密和所有权-本维修手册内容的变更恕不另行通知。
未经三星书面授权而发布，传送，或违背本文件中的任何内容或数据是严格禁止的。

UCP3000

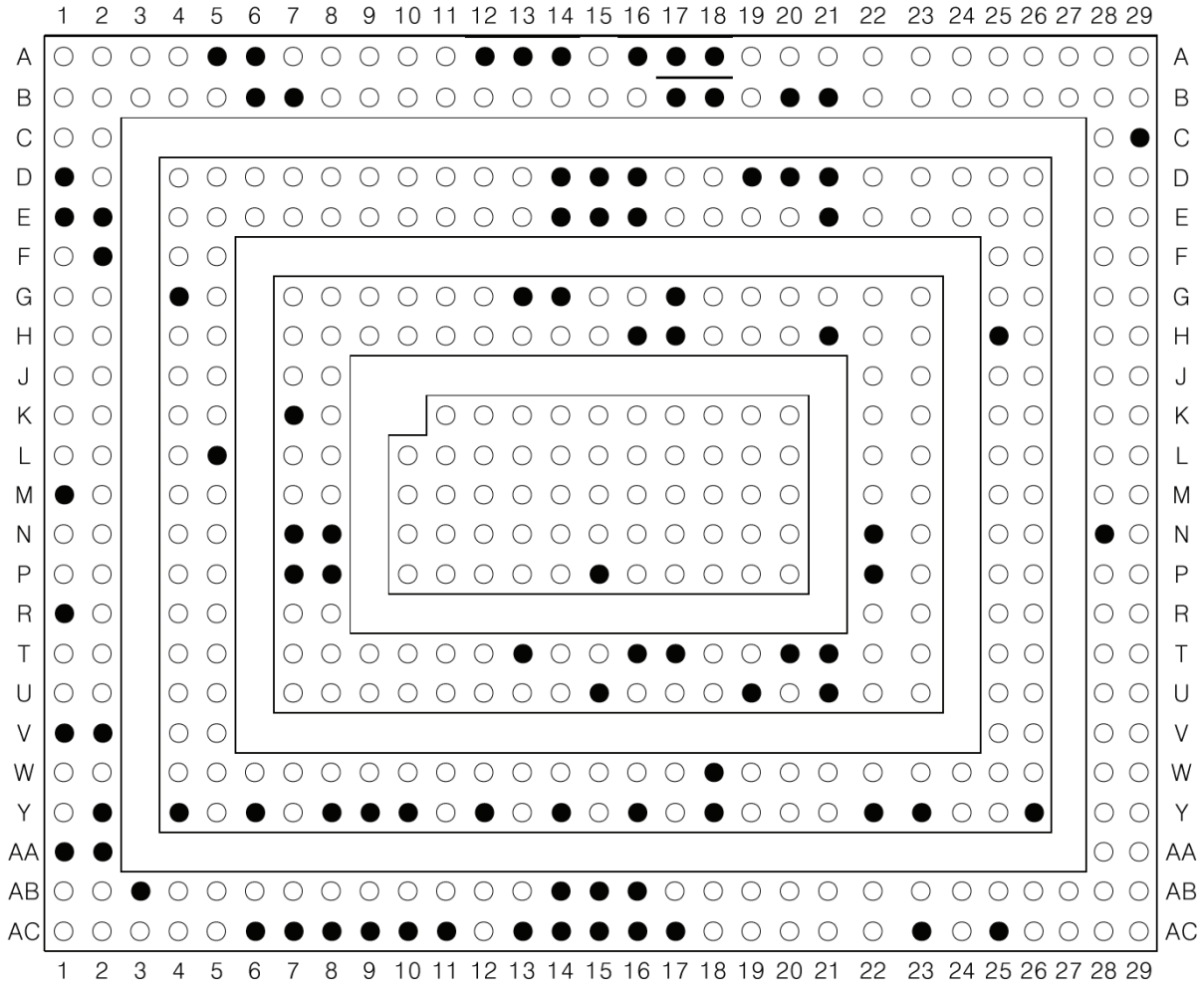

保密和所有权-本维修手册内容的变更恕不另行通知。
未经三星书面授权而发布，传送，或违背本文件中的任何内容或数据是严格禁止的。

U3004

	1	2	3	4	5	6	7	8	9	10	11	12	13	14	15	16
A	○	○	○	○	○	○	○	○	○	○	○	○	○	○	●	●
B	○	●	●	○	●	●	○	○	●	●	○	○	●	○	○	●
C	●	●													○	●
D	○	○		●	○	○	●	●	●	●	○	○	○		●	●
E	○	○		○	○		○	○	○	○		○	○		●	●
F	○	○		●	○		○	○	○	○		○	●		●	○
G	○	○		●	●		○	○	○	○		●	●		●	●
H	○	●		○	○	●	○	●	○	○	○	○	●		●	○
J	○	○													●	●
K	●	○	○	○	○	○	○	○	○	○	○	●	○	●	●	●
L	●	○	○	○	○	○	○	○	○	○	○	○	○	○	●	●

U500

	1	2	3	4	5	6	7	8	9	10	11	12
A	●	○	○	○	○	○	○	○	○	○	○	●
B	○	○	○	○	○	○	○	○	○	○	○	○
C	○	○	○	○	○	○	○	○	○	●	○	○
D	○	○	○	○	○	○	○	○	○	●	○	○
E	○	○	○	○	○	○	○	○	○	○	○	○
F	○	○	○	○	○	○	○	○	○	○	○	○
G	○	○	○	○	○	○	○	○	○	●	○	○
H	○	○	○	○	○	○	○	○	○	○	○	○
J	○	○	○	○	○	○	○	○	○	○	○	○
K	○	○	○	○	○	○	○	○	○	○	○	○
L	○	○	○	○	○	○	○	○	○	●	○	○
N	●	○	○	○	○	○	○	○	○	○	○	●

保密和所有权-本维修手册内容的变更恕不另行通知。
未经三星书面授权而发布，传送，或违背本文件中的任何内容或数据是严格禁止的。